Chapter 2
Valuation Basics

The valuation standards and procedures described in this chapter apply to Indian oil and gas production. Please see https://www.onrr.gov/Valuation/index.htm for the most current regulations as well as proposed and final rulemakings. For production from federal properties, please see the *Oil and Gas Federal Payor Handbook*, available at www.onrr.gov.

2.1 Applicable Leases and Lands

Tribal lands held in trust and Indian allotted lands have a unique legal status and have protections against alienation. Tribal lands are recognized by treaty, executive order, or act of Congress. Many current Indian reservation boundaries were created by one or more of these actions. Companies operating on Indian lands should be aware of the unique legal history surrounding the Indian reservation or allotment where they operate. The treaty, executive order, or act of Congress may result in a company having to interact with one or more tribal groups. Furthermore, the land status of both tribal and allotted lands can be complex due to checkerboarding and interests acquired by non-Indian parties. Tribes may also own land in fee simple, and in such situations, federal oversight may be limited. Depending on the unique legal history and specific land status, the guidance in this handbook may not apply.

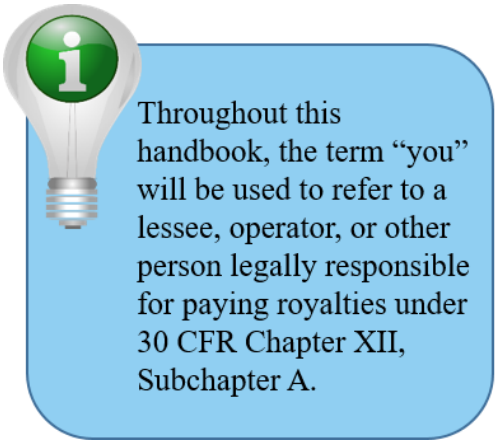

This handbook applies to Indian (Tribal and allotted) oil and gas leases subject to the regulations under 30 CFR 1202 and 1206. This handbook does not apply to leases in Osage County, Oklahoma.

2.2 Production Requiring Royalty Valuation

Royalty valuation procedures described in this handbook and under 30 CFR parts 1202 and 1206 apply to Indian oil and gas production that is:

- Removed or sold from the lease,
- Avoidably lost,
- Wasted,
- Drained, or
- Otherwise subject to royalty under the terms of the lease.

The Bureau of Land Management (BLM) is primarily responsible for determining whether production is royalty-bearing (www.blm.gov). The Bureau of Indian Affairs (BIA) is responsible for lease and agreement approval, administration, and termination (www.bia.gov).

Certain volumes of production may be royalty free if authorized by the terms of the lease. These volumes usually include production used on or for the benefit of the lease or agreement (such as for fuel or pressure maintenance) and unavoidably lost production. Although such production is not subject to royalty, the volumes must be reported using ONRR's production accounting system. For additional information on production reporting, see www.onrr.gov for the *Minerals Production Reporter Handbook*.

V**alue is established the month that the production is removed, saved, or sold from the lease**. Check your lease language for specific language on the timing of royalty value.

2.3 Precedence of Lease Terms, Statutes, Treaties, Settlement Agreements, and Court Decisions

In most cases, the valuation standards and procedures described in this handbook apply equally to all Indian production.

! Always refer to your lease document first. Many Indian lease documents have unique terms.

In those cases where the valuation regulations are inconsistent with the valuation provisions in the lease, the lease terms, including those that have been modified by subsequent agreements, govern the valuation to the extent of the inconsistency under 30 CFR §§1202.100(b)(3) and 1202.555(c).

Specific provisions of statutes, treaties, or settlement agreements between the United States, or the Indian lessor, and a lessee may also take precedence over the valuation regulations where inconsistencies occur under 30 CFR §1206.50(c) for Indian oil and §1206.170(b) for Indian gas. This primacy rule extends to court orders and legal decisions resolving valuation issues and will govern to the extent of any inconsistency that may result from the order or decision.

In addition, decisions from the Interior Board of Land Appeals (IBLA), the Interior Board of Indian Appeals (IBIA), as well as those rendered in Federal courts, have the potential to impact ONRR regulations as drafted or as interpreted in cases being litigated as well as other cases involving the same subject matter.

2.4 Quantities and Qualities

This section describes how production quantity and quality are determined for royalty purposes. Standards discussed in this section apply to all royalty-bearing products, including oil, condensate, unprocessed gas, residue gas, gas plant products, and other products.

2.4.1 Royalty Measurement Points

Lessees must report and pay royalties on the **quantity and quality** of production measured at the point of royalty settlement, also referred to as the BLM-approved Royalty Measurement Point (RMP). This handbook will use "point of royalty settlement" and "RMP" interchangeably.

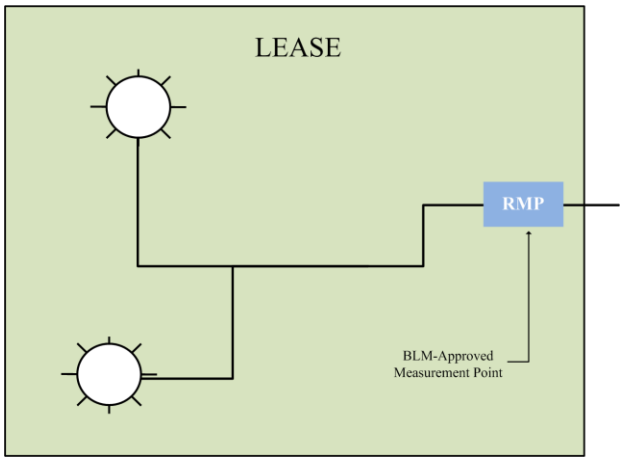

The point of royalty settlement/RMP is the meter where production is measured for royalty purposes and is determined by the Bureau of Land Management (BLM) for onshore production.

The RMP is usually located on the lease or agreement, at or near the wellhead. Lessees require prior approval from the BLM to place the RMP off of the lease or agreement. If you have questions about which meter is the RMP, check with your local BLM office for assistance.

2.4.2 Timeline for Reporting

Most leases contain language stating that you must pay royalties using the appropriate value for the month when production is removed, saved, or sold from the lease. For example, if you remove production from the lease or agreement and place it in an underground gas storage reservoir in January, royalty value is the value of production in January, even though you may have removed production from storage and sold it at a different price at a later date.

In situations where gas is processed, royalty is generally due on the monthly net output (quantity) of residue gas and gas plant products measured at the tailgate of the plant and attributable to the lease under 30 CFR §1206.175. For more information, please refer to Chapter 4 of this handbook, which will discuss processed gas valuation in more detail.

!

Although royalty value is established during the production month**, lessees must submit electronic royalty reports (Forms ONRR-2014) to ONRR no later than the last day of the calendar month following the month of production.** For example, if the production month ends on March 31st, lessees must submit the report no later than April 30th. If the last day of the month falls on a Saturday, Sunday, or federal holiday, the due date is the next official workday.

ONRR requires electronic reporting unless you qualify for an exception under 30 CFR §1210.105. You must receive prior approval from ONRR to report via paper reports. If you receive approval from ONRR, you must use the official Oil and Gas Operations Report Form ONRR-4054 (OGOR) to report. Please refer to www.onrr.gov for information about ONRR forms.

2.4.3 Reporting Standards

Lessees must report the quantity (volume) and quality of production using the units of measurement specified under 30 CFR §1202.101 for oil and §1202.558 for gas. Please see the table below for a summary.

Product:	Quality and Quantity Reporting Requirements:
Oil (30 CFR §1202.101)	Report barrels (42 gallons) (231 cubic inches each)
	Reported API oil gravities determined in accordance with standard industry procedures after correction to 60°F
	Report as clean barrels, adjusted for basic sediment and water (BS&W)
Gas (30 CFR §1202.558) Including carbon dioxide (CO_2), nitrogen (N_2), helium (He), residue gas, and any other gas marketed as a separate product	Report Mcf and MMBtu. Report gas with no British thermal unit (Btu) content on an Mcf basis. Report gas volumes and Btu heating values under the same degree of water saturation*
	Adjust Mcf to a pressure base of 14.73 psia at 60°F**
Natural Gas Liquids (NGLs) (30 CFR §1202.558 (b) (2))	Report standard U.S. gallons (231 cubic inches) at 60°F
Sulfur (30 CFR §1202.558 (b) (3))	Report long tons (2,240 pounds)

Wet vs. Dry Reporting on the (OGOR) & Form ONRR-2014

For production periods after February, 2017, the regulations under 43 CFR §3175.126(a)(1), require operators to report heating values on a dry basis on the OGOR.

ONRR's regulations at 30 CFR §1202.152, Standards for reporting and paying royalties on gas, require you to: "(i) Report gas volumes and British thermal unit (Btu) heating values, if

applicable, under the same degree of water saturation…" Therefore, for periods after February 2017, you must report using a dry water vapor content on the Form ONRR-2014 and the OGOR.

For production periods prior to February, 2017, contact your local BLM office for additional information on wet vs. dry reporting.

*****Converting to 14.73 psia***

The following figure illustrates one way to convert from a different pressure base to 14.73 psia. For our example, we used a standard conversion factor from a publicly-available source. You are not required to use this factor or this method in your calculations.

2.4.4 Adjustments for quantity and quality

If the lessee's sales price or value of production is based on a quantity or quality different from that measured at the point of royalty settlement, the value must be adjusted to compensate for any differences under 30 CFR §§1206.53(a)(2) and 1206.174(a)(2). For instance, if a lessee's gross proceeds from the sale of gas are based on a volume measured at a point other than the approved point of royalty settlement and that volume is less than the volume measured at the approved point of royalty settlement, then the gross proceeds for royalty purposes must be increased to reflect the higher volume measured at the approved point of royalty settlement.

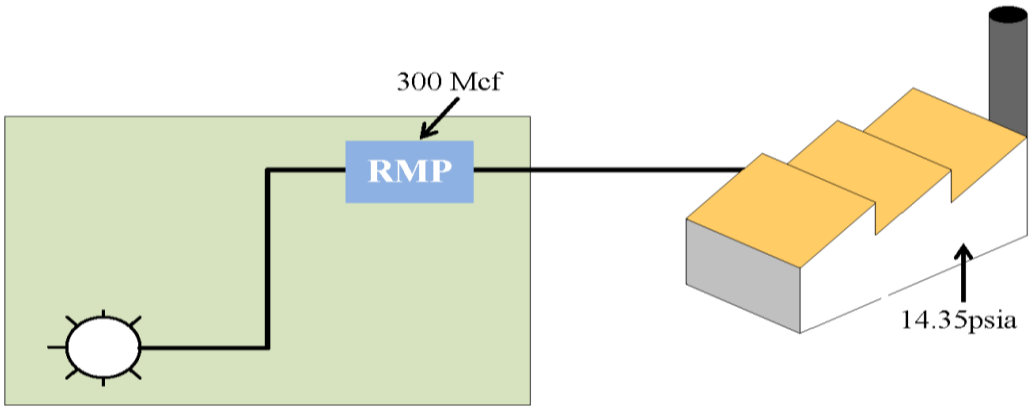

How to convert from a pressure base of 14.35 to a pressure base of 14.73:

Givens:

- 300 Mcf measured at RMP
- Pressure base at plant and from plant statement: 14.35psia
- Pressure base required for reporting: 14.73psia

$$300\ Mcf\ \times \left(\frac{14.35\ psia}{14.73\ psia}\right) =$$

$$300\ Mcf \times .974202 = 292.26\ Mcf$$

2.4.5 Actual or theoretical losses

Under 30 CFR §§1206.58 and 1206.175, you may not take any deductions from the royalty volume or royalty value for actual or theoretical losses.

Always refer to your lease document first. Many Indian lease documents have unique terms.

Royalty is due on 100 percent of the volume measured at the point of royalty settlement. ONRR published a Dear Reporter Letter explaining reporting of Fuel Used or Lost Along a Pipeline on December 18, 2014. *See* the December 18, 2014 Reporter Letter for reporting and valuation information.

Lessees are not required to report losses that occur prior to the point of royalty settlement if the BLM determines such losses are unavoidable. Fuel used on or for the benefit of the lease may also be considered beneficial use. Although these volumes are not royalty-bearing, lessees must report them using the currently-adopted ONRR production accounting system.

2.4.6 Quantity determinations for processed gas and gas plant products

When gas is processed for the recovery of residue gas and gas plant products, a portion of the net plant output is allocated to each lease supplying production to the plant. The specific allocation procedure depends on whether the plant processes gas of uniform content or non-uniform content.

When the net plant output is derived from gas produced from a single lease, the quantity and quality of residue gas and gas plant products attributable to the lease are simply the net plant output. However, gas from multiple leases supplying the plant frequently contains diverse amounts of hydrocarbons and/or non-hydrocarbon substances. In these situations, the allocation must be based on the theoretical or tested volume of residue gas and gas plant products contained in the gas at the lease. See Chapter 4, Indian Gas Valuation, for further information.

2.5 General Valuation Principles

Lessees of Indian lands have an obligation to prudently market production to the mutual benefit of the lessee and the lessor. As a general rule, the **minimum value** of production for royalty purposes is the **gross proceeds** received under an **arm's-length contract** for the sale of production in marketable condition, less applicable allowances. Please note that this may not be the case if your Indian lease is in an index zone. Please see index zone valuation in Chapter 3 of this handbook for further information.

2.5.1 Lease Language

The specific language in each lease instrument dictates how lessees must report and pay royalties. For example, under the lease language below, the lessee pays a fixed annual amount for gas, per well, regardless of the volume of gas produced.

And the lessee shall pay as royalty on each gas producing well three hundred dollars per annum in advance, to be calculated from the date of commencement of utilization

(iii) Value of Gas. The value of all natural gas produced under this Lease shall be the dollar amount actually received by Lessee for all gas produced, saved and sold at the Delivery Point, if actually sold at the Delivery Point, or if such gas is actually sold downstream of the Delivery Point, the net dollar amount determined after deducting all transportation and processing allowances between the Delivery Point and the actual point of sale, in accordance with 30 C.F.R. Part 206.

Under the following lease language, the lessee values royalties based on the amount they receive, less transportation and processing allowances under ONRR's regulations.
This last example of lease language includes three specific, important concepts particular to the valuation of Indian production.

Royalty - To pay a royalty of 20 percent of the value or amount of all oil, gas, and/or natural gasoline, and/or all other hydrocarbon substances produced and saved from the land leased herein, save and except oil, and/or gas used by the lessee for development and operation purposes on said lease, which oil and gas shall be royalty-free. During the period of supervision, "value" for the purposes hereof may***, in the discretion of the Secretary***[emphasis added], be calculated on the basis of the highest price paid or offered (whether calculated on the basis of short or actual volume) at the time of production for the major portion of the oil of the same gravity, and gas, and/or natural gasoline, and/or all other hydrocarbon substances produced and sold from the field where the leased lands are situated, and the actual volume of the marketable product less the content of foreign substances as determined by the oil and gas supervisor. The actual amount realized by the lessee from the sale of said products, may, in ***the discretion of the Secretary***[emphasis added], be deemed mere evidence of or conclusive evidence of such value. When paid in value, such royalties shall be due and payable monthly on the last day of the calendar month following the calendar month in which produced, when royalty on oil produced is paid in kind, such royalty oil shall be delivered in tanks provided by the lessee on the premises where produced without cost to the lessor unless otherwise agreed to by the parties thereto at such times as may be required by the lessor. **Provided,** that the lessee shall not be required to hold such royalty oil in storage longer than 30 days after the end of the calendar month in which said oil is produced. **And Provided further,** That the lessee shall be in no manner responsible or held liable for loss or destruction of such oil in storage caused by acts of God. All rental and royalty payments, except as provided in section 9(a) and 4(c) shall be made by check or draft drawn on a solvent bank, open for the transaction of business on the day check or draft is issued, to

> the BUREAU OF INDIAN AFFAIRS**.** It is understood that in determining the value for royalty purposes of products, such as natural gasoline, that are derived from treatment of gas, a reasonable allowance for the cost or manufacture shall be made, such allowance to be two-thirds of the value of the marketable product unless otherwise ***determined by the Secretary of the Interior*** [emphasis added] on application of the lessee or on his own initiative, and that royalty will be computed on the value of gas or casinghead gas, or on the products thereof (such as residue gas, natural gasoline, propane, butane, etc.), whichever is greater.

Those concepts are: **secretarial discretion**, **accounting for comparison or dual accounting**, and **major portion**. This chapter will introduce each concept and specific examples will be provided in Chapter 3 - Oil Valuation, and Chapter 4 - Gas Valuation.

2.5.2 Secretarial Discretion Language

If a lease instrument contains language giving the Secretary of the Interior discretion to determine value, lessees must value the royalty share of production from that lease under ONRR's regulations under 30 CFR 1202 and 30 CFR 1206.

2.5.3 Major Portion

Many Indian leases contain a "major portion provision," indicating that the lessee must use a value representative of the highest price paid for the majority of production in a field or area for the royalty share, whether the lessee received that price or not. The following lease language with emphasis added is an example of a major portion provision:

"During the period of supervision, "value" for the purposes hereof may, in the discretion of the Secretary, ***be calculated on the basis of the highest price paid or offered (whether calculated on the basis of short or actual volume) at the time of production for the major portion of the oil of the same gravity, and gas, and/or natural gasoline, and/or all other hydrocarbon substances produced and sold from the field where the leased lands are situated,*** *and the actual volume of the marketable product less the content of foreign substances as determined by the oil and gas supervisor."*

ONRR defines Major Portion for oil under 30 CFR §1206.51 as follows:

Major Portion Price means the highest price paid or offered at the time of production for the major portion of oil produced from the same designated area for the same crude oil type.

There are differences between major portion prices under ONRR's Indian Oil and Indian Gas regulations. This handbook will address Indian oil and Indian gas major portion in detail and provide specific examples in Chapter 3 - Oil Valuation and Chapter 4 - Gas Valuation.

2.5.4 Dual Accounting/Accounting for Comparison

Many Indian leases require accounting for comparison, or "dual accounting." The following lease language, with emphasis, requires accounting for comparison:

*"… and that royalty will be computed on the value of gas or casinghead gas, or on the products thereof (such as residue gas, natural gasoline, propane, butane, etc.), **whichever is the greater**."*

Dual accounting may not be the only requirement of your lease. Section 2.5.5 addresses other elements of your lease provisions including Index Zone Pricing, Arm's-Length Dedicated Contracts, and Safety Net. Please read the complete details of your lease to be sure you meet all the provisions in it.

2.5.5 Indian Gas Valuation Basics

The best way to ensure that you are reporting and paying royalties correctly on Indian gas production is to begin with your lease terms. If your lease terms **do not** contain language giving the Secretary of the Interior discretion to determine value or reference the valuation regulations at 1206, then the value for royalty purposes is calculated using the specific language within your lease.

If your lease terms **do** contain language giving the Secretary of the Interior discretion to determine value or reference the valuation regulations at 1206, then you will use ONRR's regulations to determine whether your lease is subject to index-zone or non-index-zone valuation.

2.5.5.1 Index-Zone Valuation

The regulations under 30 CFR §1206.171, governing Indian gas valuation, define an index zone as follows:

Index zone means a field or an area with an active spot market and published indices applicable to that field or area that are acceptable to ONRR under 30 CFR §1206.172(d)(2).

The regulations define index-pricing points as "any point on a pipeline for which there is an index."

You must value your Indian gas production using the index-zone

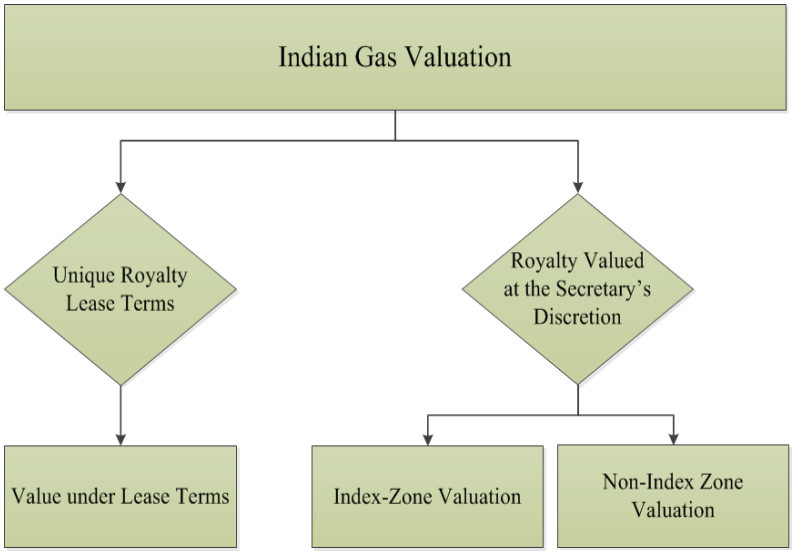

method under 30 CFR §1206.172 if your lease is located in an index zone and your lease either has a major portion provision, or provides for the Secretary of the Interior to determine the value of production, whether or not you received the index price. Index-zone values only apply to the hydrocarbon components of your gas stream.

ONRR published a list of tribes and counties in each index zone in the *Federal Register*. *See* 64 FR 66771 – November 30, 1999

ONRR also published a list of index price points used in each index-zone price calculation. *See* 76 FR 37828 – June 28, 2011

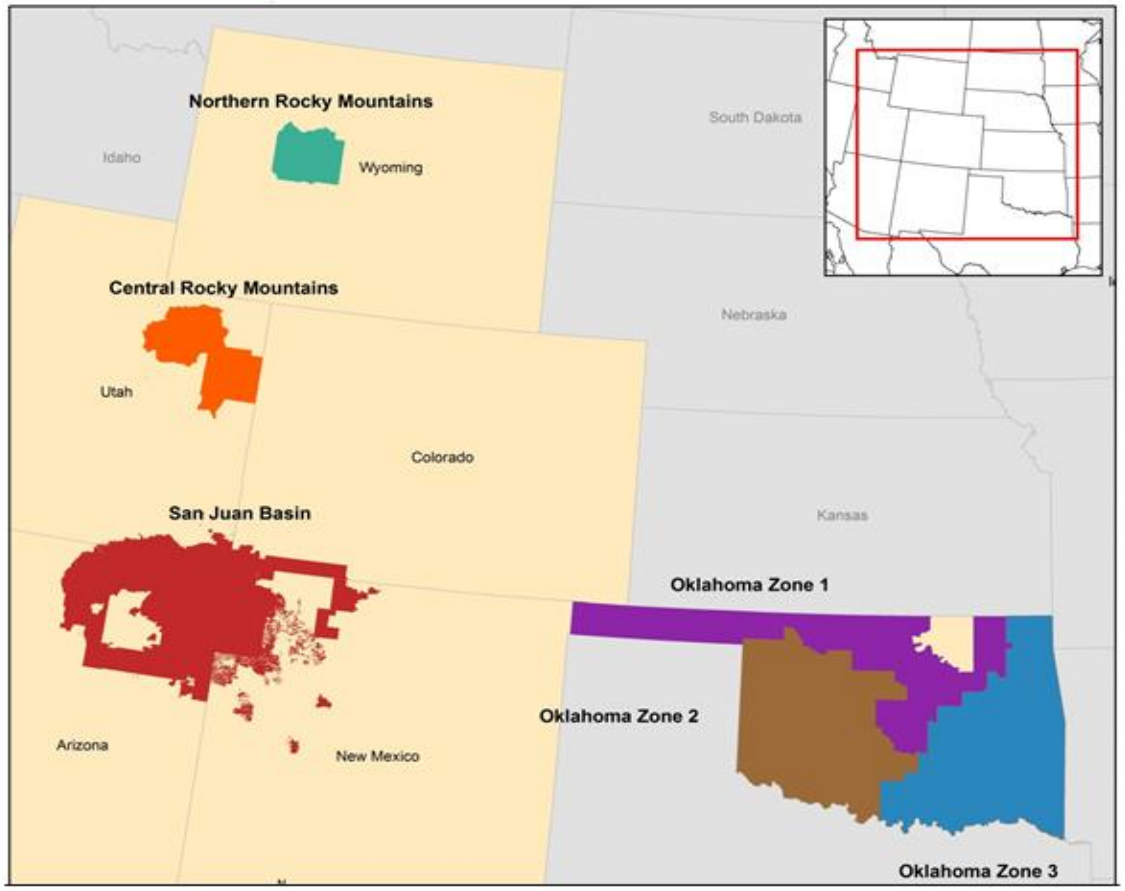

The map above shows the locations of Indian gas index zones. The following table delineates which Designated Areas are in Index and Non-Index Zones.

Designated Area	Index Zone	Non-Index Zone
*Alabama-Choushatta		
Blackfeet Reservation		X
Crow Reservation		X

Fort Belknap Reservation		X
Fort Berthold Reservation		X
Fort Peck Reservation		X
Jicarilla Apache Reservation	San Juan basin	
Northern Cheyenne Reservation		X
Rocky Boys Reservation		X
Southern Ute Reservation	San Juan basin	
Turtle Mountain Reservation		X
Ute Mountain Ute Reservation	San Juan basin	
^Uintah and Ouray Reservation	Central Rocky Mtn	
Wind River Reservation	Northern Rocky Mtn	
**Oklahoma Zone 1	OK Zone 1	
**Oklahoma Zone 2	OK Zone 2	
**Oklahoma Zone 3	Ok Zone 3	
***Navajo Allotted on the Navajo Reservation		X
Navajo Tribal on the Navajo Reservation	San Juan basin	

* Alabama-Choushatta reservation in Texas has 9 Indian leases, lease terms override our rules. These are all gross proceeds leases.

** State of Oklahoma is divided into three designated areas that co-inside with the three index zones. Each designated area/zone is defined by a group of counties.

*** Navajo Allotted leases on the Navajo Reservation were opted out of index zone pricing before the effective date of the rule (January 1, 2000).

^ Both the Tribal and Allotted lease on the Uintah and Ouray Reservation started out under the non-index zone valuation. However, currently both are now under index zone valuation.

Non-index zone valuation is the higher of gross proceeds under the sales contract or the major portion price, whichever is higher.

2.5.5.2 Arm's-Length Dedicated Contracts

The first safeguard built into index-zone valuation is the provision addressing arm's-length dedicated contracts. ONRR's regulations under 30 CFR §1206.171 define dedicated as:

Dedicated means a contractual commitment to deliver gas production (or a specified portion of production) from a lease or well when that production is specified in a sales contract and that production must be sold pursuant to that contract to the extent that production occurs from that lease or well.

Dedicated gas sales occur <u>before</u> the index-pricing point. If you sell your production under an arm's-length dedicated contract, you must:

1. Determine your gross proceeds under 30 CFR §1206.174(b)
2. Compare the gross proceeds value to the index-based value (including dual accounting)
3. Pay royalties on the higher of the above two values

Example of an Arm's-Length Dedicated Sale in an Index Zone

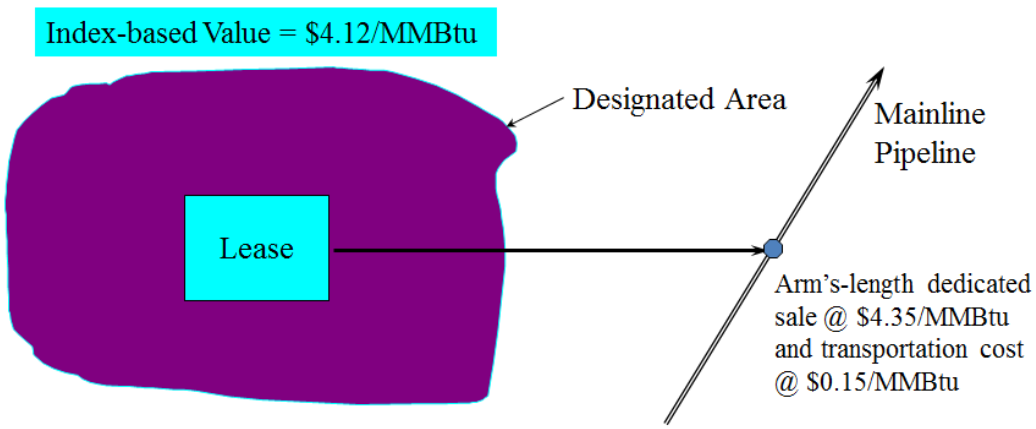

Royalties paid on higher of index-based value ($4.12), or
arm's-length gross proceeds ($4.35) - ($0.15) transportation = ($4.20)

Royalties paid on $4.20/MMBtu

2.5.5.3 Safety Net Calculation

The second safeguard built into index-zone valuation regulations is the provision under 30 CFR §1206.172(e) addressing safety net calculations.

The safety net calculation is used to capture potential additional royalty value when the first arm's-length sale by a lessee or a lessee's affiliate takes place downstream of the first index pricing point (generally outside of the index zone).

The safety net price is:

- a volume-weighted average contract price per delivered MMBtu
- based only on arm's-length sales beyond the first index-pricing point
- for production from leases in the same index zone
- not reduced by the lessee's transportation costs
- not reduced by costs associated with placing production into marketable condition or to market the gas.

Under 30 CFR §1206.172 (e) (4) (i), lessees must also determine the safety net differential (SND) for each month for each index zone.

The following is the formula for calculating the SND:

SND = [(0.80 x S) - (1.25 x I)]

Where: S = safety-net price and I = index-zone price

Additional royalties are due if the safety net differential is positive.

By June 30 following each calendar year, lessees must calculate, for each month of the calendar year, a safety net price and safety net differential. Then, lessees must submit the results to ONRR using Form ONRR-4411.

This handbook will address both dedicated contracts and safety net calculations in detail and provide specific examples in Chapter 4 - Gas Valuation.

2.5.5.4 Non-Index-Zone Valuation (Major Portion)

ONRR designated twelve areas that are *not* subject to index-zone valuation. These non-index-based pricing areas are reflected in the following map*:

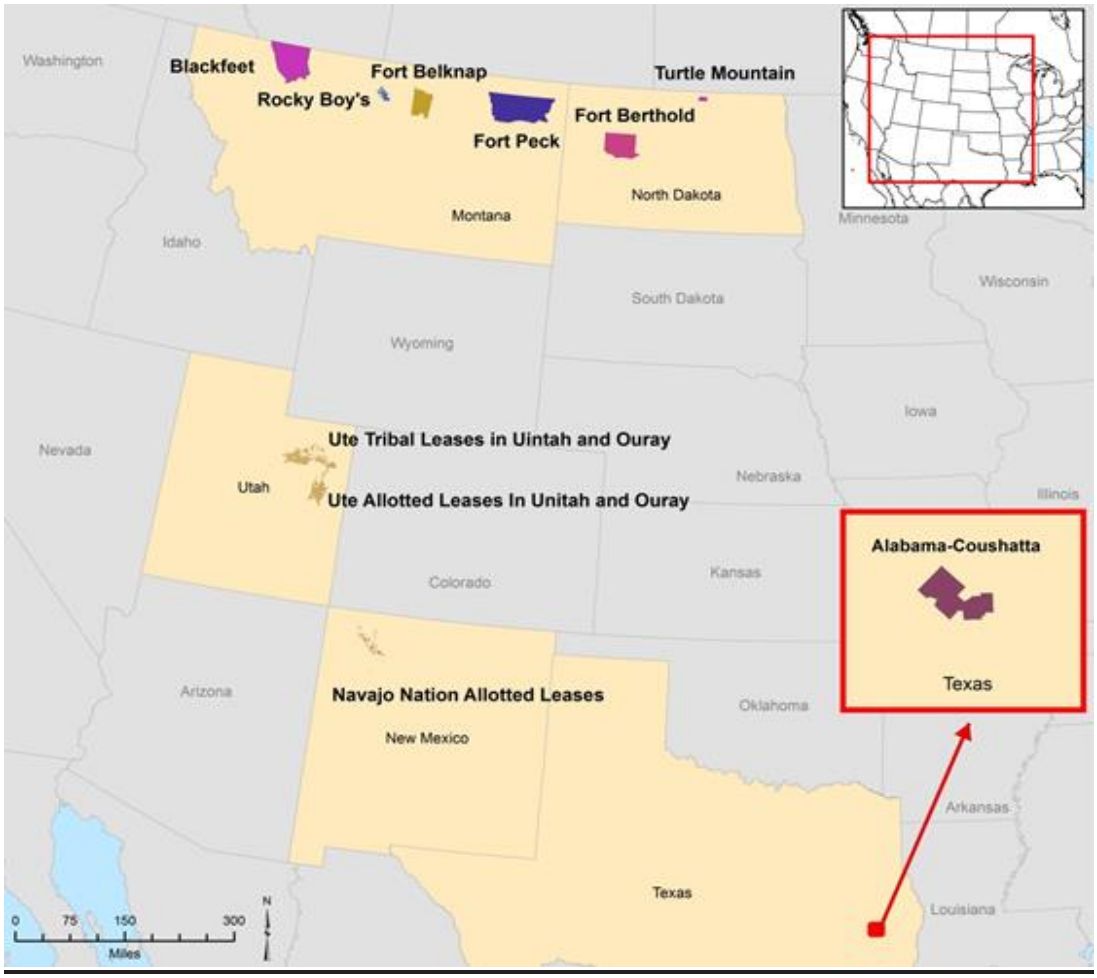

Value Indian gas produced from non-index-zone designated areas under 30 CFR §1206.174. **Lessees must initially report the current month's value using the regulations under 30 CFR §1206.174(b) or (c)**, depending on whether the transaction is arm's length or non-arm's length.

ONRR calculates the major portion price approximately eighteen months *after* the lessee's initial reporting. If your sales price was *less* than the ONRR calculated major portion price, you must submit adjustments valuing your gas at the major portion price. If your sales price was *higher* than the ONRR calculated major portion price, do not adjust your reporting.

! In a non-index zone, a company cannot properly fulfill its dual accounting requirement until the major portion prices along with the due date is published in the *Federal Register* and published on www.onrr.gov.

ONRR notifies lessees of the major portion values and due dates in the *Federal Register*, as well as through ONRR's electronic messaging system. In addition, ONRR's Marketing and Spatial Analysis group publishes major portion values at onrr.gov.

2.5.6 Indian Oil Valuation Basics

2.5.6.1 Production After July 1, 2015

On May 1, 2015, based on consensus from the Indian Oil Negotiated Rulemaking Committee, ONRR amended the regulations governing the valuation of oil produced from Indian leases (80 FR 24779 (May 1, 2015)), effective for production beginning July 1, 2015. ONRR also published new reporting requirements for Indian oil valuation.

ONRR published two Dear Reporter Letters in 2015 that detail the new valuation rule:

1. http://onrr.gov/PDFDocs/20150215.pdf (covering the new rule) and
2. http://onrr.gov/PDFDocs/20150821.pdf (clarification of inadvertently described land descriptions as they pertain to the North Fort Berthold and South Fort Berthold Designated Areas).

For each of the sixteen designated areas, the value of oil for royalty purposes is the ***higher* of** the two options identified below:

1. Your price based on **gross proceeds** (less any applicable transportation)

--OR--

2. The Index-Based Major Portion (**IBMP**) price

The IBMP price is calculated by using the New York Mercantile Exchange (NYMEX) Calendar Month Average (CMA) and adjusting this value for a designated area-specific Location and Crude Type Differential (LCTD).

2.5.6.2 Production Prior to July 1, 2015

Report your actual gross proceeds and allowable transportation costs separately. Use the sales type code (ARMS or NARM) based on your sales contract. Use product code 01 for all crude types. ONRR will send out orders with instructions to amend reporting if the major portion price is above your reported gross proceeds less applicable transportation.

2.5.7 The ONRR Royalty Equation

For valuation purposes, royalty is due on the volume of production, multiplied by the unit value of production, multiplied by the royalty rate. Allowances are reported separately except under specific circumstances.

Royalty due =

[volume x unit value x royalty rate] - allowances

Oil Volume Sold:	100 barrels
Unit Value	$50.00/barrel
Royalty Rate:	20%
Allowable Transportation Costs:	$1.00/barrel

[100 bbl x $50/bbl x 20%] - [$1.00/bbl x 100 bbl x 20%] = $980.00

Royalty Equation Variable	Explanation
Volume	The volume of oil, gas, condensate, or other production measured at the agency-approved point of royalty settlement. The units you should report to ONRR for each product are addressed later in this chapter.
Unit Value	The per-unit price that you apply to the royalty-bearing volume.
Royalty Rate	You can find the royalty rate specific to your property in your lease.
Allowable Transportation & Processing Costs	ONRR's regulations allow you to deduct **certain** costs of transportation and processing from the royalties due. Costs of placing production into marketable condition cannot be deducted from the lessor's royalty share. Allowances will be discussed throughout the handbook and specifically addressed in Chapters 5-7.

2.5.8 Arm's-length Contracts

ONRR's regulations define arm's-length contracts under 30 CFR §1206.51 for Indian oil and §1206.171 for Indian gas. Arm's-length contracts are contracts or agreements that were arrived at in the marketplace between independent, non-affiliated persons with opposing economic interests regarding those contracts.

The lessee has the burden to prove that a contract is arm's length. The lessee must show that the contract was negotiated at arm's length and that the parties operating under the contract have an arm's-length relationship during the month of production. That is, even if a contract was negotiated at arm's length, if, during the production month, the parties to the contract don't have an arm's-length relationship, the contract is not considered arm's length. Further, if the parties to a contract are related by blood or marriage, the contract is automatically considered non-arm's length.

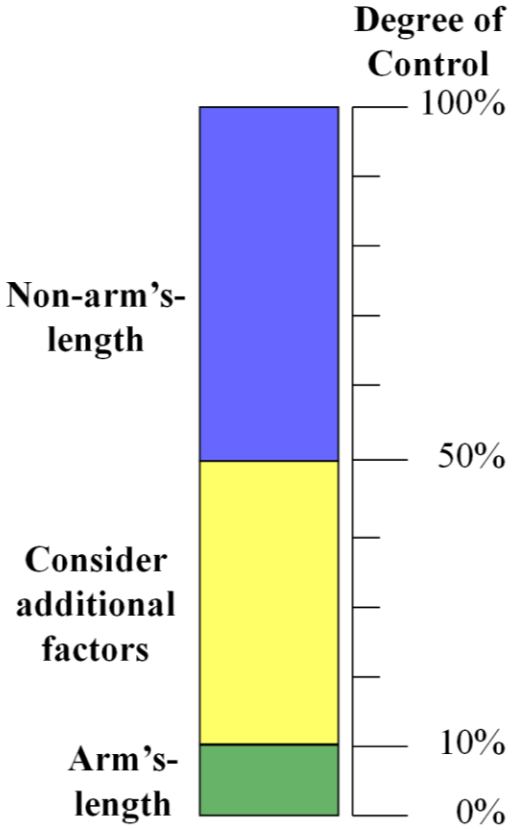

When determining whether a contract is arm's length, you should first look at ownership and control between the parties to the contract. If there is more than 50% ownership or operational control (shown in this bar graph in blue) between the parties, the presumption is that a **non-arm's-length** transaction has taken place. If there is less than 10% ownership or operational control, the presumption is that an **arm's-length** transaction has occurred. If the degree of ownership or operational control falls between 10% and 50%, additional factors need to be considered to establish whether the transaction is arm's length or non-arm's length. These additional considerations include:

- Common officers between entities, or members of the Board of Directors
- Percentage ownership and voting securities
- The owners' participation in day-to-day operations

ONRR may also consider other factors to determine whether a contract is arm's length or non-arm's length, including evaluating the process of negotiating the contract (e.g., were the negotiations difficult or complex?); examining specific contract terms (e.g., does the contract evidence fair market practices?); and considering whether the contract includes any type of index pricing as a basis for value.

2.5.9 Gross proceeds

Under no circumstances can value be less than the **gross proceeds** received by a lessee under its contract, whether that contract is arm's length or non-arm's length. The criteria can be found under 30 CFR §1206.52 (a) for Indian oil. The gross proceeds on which a valuation determination is made include all consideration passing between the buyer and seller for production from Indian leases, whether that consideration is in the form of money or any other form of value.

For example, if a small scale, "hobby" oil and gas operator produces a nominal amount of oil from its leasehold and sells it to a neighbor at arm's length for a negotiated price of $50, two tickets to a theater play, and a bushel of peaches that the neighbor grew on his organic farm, the **gross proceeds** for that transaction ("total monies and other consideration") would be:

- $50, ***plus***
- The value of the theater tickets, ***plus***
- The market value of the bushel of peaches

Gross proceeds include reimbursements paid to the lessee for severance and ad valorem taxes as well as any payments to the lessee for certain services, such as placing the lease production into **marketable condition**, to the extent that the lessee is obligated to perform such services at no cost to the Indian lessor. (See "Marketable condition" in section 2.5.4 for more information.). Also, reimbursements received by lessees from purchasers for certain production-related costs are part of the lessee's gross proceeds.

Gross proceeds also include all prices or benefits to which a lessee is legally entitled under the terms of the contract, even if the lessee fails to take proper or timely action to secure such benefits.

2.5.10 Values Based on Contracts and Agreements

The value of production for royalty purposes must be based on the highest price the lessee can receive through legally enforceable claims under its contract under 30 CFR §1206.52(f). If the lessee fails to take proper or timely action to receive prices or benefits that are authorized by the contract, the lessee must pay royalty at a value based on the obtainable price or benefit, unless the contract has been revised or amended. Revisions or amendments to contracts must be in writing and signed by all parties to that contract.

Contract disputes. If a purchaser unilaterally reduces contract prices and the lessee takes documented, timely action to force compliance, the lessee may compute royalties on the actual price received until the dispute is resolved. An example of unilateral price reduction would be when a purchaser imposes a market-out price under a contract that does not contain any market-sensitive price provisions.

Likewise, if the lessee makes documented, timely application for a price increase or benefit entitled by the contract but the purchaser refuses, and the lessee takes reasonable measures to

force compliance, the lessee does not owe additional royalties unless or until monies or consideration resulting from a price increase or benefit are received under 30 CFR §1206.52(f). When a dispute is settled, royalty is owed on any additional amount the lessee receives and is due by the end of the month following the month the additional amount is collected.

All actions taken by the lessee to enforce compliance must be documented. However, any action taken by the lessee to enforce compliance must be taken as soon as the lessee knows or should reasonably know that compliance measures should be employed to comply with these regulations.

Late purchaser payments. If a purchaser fails to pay whether in whole, in part, or timely for a quantity of production removed from the lease or unitized or communitized area, the lessee's obligation to pay royalties on the volume removed at the time of removal is not suspended. For example, if a purchaser removes production from a lease and payment is not received by the time the lessee must report and pay royalties, the lessee must still report the volume removed from the lease and pay royalties on that volume. In those cases where the lessee is not paid by the purchaser, royalties are determined based on the price established by the contract for arm's-length sales or on a value determined under the benchmark system for non-arm's-length sales.

2.5.11 Like-quality Production

When Indian production is not sold under an arm's-length contract (that is, production is disposed of under non-arm's-length or no sales conditions), value of that production is based, in part, on the value of **like-quality production** sold under arm's-length contracts in the same field or area where the leased lands are situated. Like-quality production (or lease products) is defined under 30 CFR §§1206.51 and 1206.171 as production or products having similar chemical, physical, and legal characteristics.

For valuation purposes, like-quality oil is oil that has similar American Petroleum Institute (API) gravity, sulfur content, paraffin (wax) content, heavy metals components, pour point, and other characteristics. Like-quality gas is gas that has similar methane, NGL, and non-hydrocarbon gas content (sulfur dioxide, helium, nitrogen, carbon dioxide, etc.). Generally, like-quality production will be other production from the same field or area. However, only production that is similar in quality will be used to determine value.

2.6 Unitization and Communitization Agreements

Unitization agreements, also known as units, are established to provide for the unified development and operation of an entire geologic structure or area so that drilling and production can proceed in the most efficient and economical manner.

Production from a unit is normally allocated to each tract of unitized land within the controlling participating area(s) (PA) on a surface-acreage basis, a volumetric basis, or a combination of these and/or other factors. For royalty purposes, all oil and gas produced from a federally-approved unit must be allocated to the participating federal or Indian leases under the allocation

requirements contained in the unit agreement. Lessees or operating rights owners are responsible for paying royalties on the volume of production established in the agreement allocation schedule. Value of the allocated volumes is determined by lease terms and regulations.

Communitization agreements (CAs) are agreements established to allow the development of separate tracts that could not be fully and independently developed and operated because of limitations imposed by established well spacing programs. Communitization is required in order to conform with non-optional spacing patterns established by state order.

Production under a CA is normally allocated to a federal or Indian tract(s) within the CA based on the ratio of the surface acreage of the tract(s) to the total surface acreage within the CA. For royalty purposes, all oil and gas produced from a federally-approved CA must be allocated to the communitized federal or Indian tract(s) under the allocation requirements contained in the CA. Lessees or operating rights owners are responsible for paying royalties on the volume of production established in the agreement allocation schedule. Value of the allocated volumes is determined by lease terms and regulations.

2.6.1 Royalty on agreement production

If a lessee or operating rights owner of a lease that is committed to a federally-approved unit or CA does not actually take the proportionate share of production allocated to the lease under the terms of the agreement, the full share of production attributable to the lease is nonetheless subject to royalty under 30 CFR §§1202.100(e)(1) and 1202.555(c). **In other words, royalty on production allocated to an Indian lease is due when the production is removed from the lease, unit, or CA, regardless of who takes that production.** Lessees must pay royalties on the volume of production allocated to the Indian lease. Volume is determined at the BLM-approved point-of-royalty settlement (RMP) as specified in the approved allocation schedule or commingling approval in effect for the production month.

Lessees or operating rights owners must report and pay royalties on **all** allocated production from the lease. If a lessee or operating rights owner fails to pay royalties on all allocated production, they will have violated the lease/agreement terms.

A lessee or operating rights owner must report and pay royalties on an agreement. For mixed agreements, the lessee or operating rights owner must report and pay royalties based on the volume of production sold or removed from the agreement allocated to its lease under the approved allocation schedule (entitlements), no matter who takes the production. For example, assume total oil sales from an agreement with one Indian lease and one state lease with each lease receiving a 50-percent allocation, is 100 barrels. If the lessee or operating rights owner owns 50 percent of the Indian lease but takes all 100 barrels, they must report and pay royalties on 25 barrels. The other operating rights owner(s) in the Indian lease must report and pay royalties on the remaining 25 barrels.

2.6.2 Royalty payments on agreement production

When a lessee or operating rights owner takes less than its full share of allocated production for any given month, but royalties are paid based on its full share, no additional royalty is due for prior periods when the lessee or operating rights owner subsequently takes more than its share to balance its account or when the lessee or operating rights owner is paid a sum of money by the other agreement participants to balance its account.

For instance: A lessee is entitled to take 1,000 barrels (bbl) of oil as its allocated share for a given month. The lessee actually takes 200 bbl for that month, but pays royalties on the full allocated share (1,000 bbl) of oil under the allocation and valuation methods under 30 CFR §§1202 and 1206, respectively. When the lessee later balances its account at a price per unit that is higher (or lower) than the price per unit upon which royalties were paid, no adjustment to prior period royalties is necessary.

2.6.3 Alternative agreement valuation methods

If a lessee or operating rights owner cannot comply with the valuation method established for agreement production, the lessee or operating rights owner may request to use alternative valuation methods.

The first provision, under 30 CFR §1202.100(e), allows any individual lessee or operating rights owner taking less than its proportionate share of production to request approval from ONRR to use a method different from that method described in "Royalty on agreement production" in section 2.6.2. This alternative method must be consistent with the purpose of the regulations. Use of an alternative valuation method under these particular regulations is not dependent on the use of this same method by all other lessees or operating rights owners that are a party to the unit or CA.

The second provision, under 30 CFR §§1202.100(f) and 1202.551(c), allows the lessee or operating rights owner to request approval from ONRR to use an alternative method, provided that the method is consistent with statutes and lease and agreement terms.

- Lessees or operating rights owners are permitted to use this alternative method under these conditions:
- All interest owners (including royalty interest owners, where practical) are given notice and an opportunity to comment on the proposed valuation method before it is authorized; and
- All interest owners (including royalty interest owners, where practical) agree to use the proposed valuation method for valuing production from the unit or CA for royalty purposes.
- The proposed alternative cannot reduce the royalty obligation that would otherwise be due.
- Lessees or operating rights owners must apply to and receive approval from the Program Manager, Royalty Valuation, ONRR before using the requested method to report royalties.

2.7 Deduction of Transportation and Processing Allowances

Reasonable, actual transportation and/or processing allowances are recognized deductions from the **value** of production under 30 CFR §§1206.56, 1206.177, and 1206.179. Allowances are not deductions from royalties and must be reported separately on the Report of Sales and Royalty Remittance (Form ONRR-2014). The lessee must first establish the value of production, then deduct the allowances from that value.

Transportation and processing allowances must be reported separately to ONRR using transaction codes (TCs) 11 and 15, respectively, on the Form ONRR-2014. See the *Minerals Revenue Reporter Handbook* for specific reporting instructions. The following table outlines the requirements for arm's-length and non-arm's-length transportation and processing allowance form filing:

Arm's-Length	Non-Arm's-Length
• No forms required • Must submit transportation and processing contracts and all subsequent amendment(s) within 2 months of claiming allowance	• Form ONRR-4110 Oil Transportation Allowance Report • Form ONRR-4295 Gas Transportation Allowance Report • Form ONRR-4109 Gas Processing Allowance Report • Must submit actual cost data on allowance form within 3 months after the end of the allowance year or allowance period, whichever is sooner

2.8 Marketable Condition

Royalty is due on production that is in marketable condition; that is, production sufficiently free of impurities and in a condition that is accepted by a purchaser under a sales contract typical for the field or area. The lessee is responsible for placing lease production in marketable condition at no cost to the lessor unless otherwise provided in the lease agreement or applicable regulation under 30 CFR §1206.55 (Indian oil) and §1206.171 (Indian gas).

2.8.1 The Components of Marketable Condition

Marketable condition typically includes the following four components:

1. **Compression**: encompasses the process of raising the pressure of gas. This process is defined within ONRR's regulations under 30 CFR §1206.171 (Indian gas).
2. **Gathering**: includes the movement of lease production to a central accumulation and/or treatment point (often referred to as the **central accumulation point, or CAP**). This location can be sited either on or off the lease, unit, or communitized area as approved by

the BLM. It is important to keep in mind that ONRR's definition of gathering 30 CFR §1206.171 (Indian gas) is more limited in scope and application than the definition used by most of the oil and gas industry. Further, transportation does not start until *after* the central accumulation point as designated by the BLM.

3. **Dehydration**: involves the removal of unwanted water or water vapor from the product stream. There is no regulatory definition for dehydration, but this specification is often a component part of a contract or purchasing agreement between the lessee and a third party.
4. **Sweetening or Treatment**: incorporates the processes necessary to remove or reduce "acid gases" such as hydrogen sulfide (H_2S) and carbon dioxide (CO_2) from the production stream. Although these components are often deemed waste products, that is not always the case. As with dehydration, there is no regulatory definition for sweetening, but this specification is generally a condition of a contract or purchasing agreement between the lessee and a third party.

A series of quality specifications required by the mainline pipeline that transports the product to any of the various markets across the country establish marketable condition. For example, mainline pipeline(s) have an established maximum quantity of acid gases, water vapor, or other objectionable matter, and a pressure requirement for gas to enter the pipeline. It is these specifications that deem what is and is not marketable condition along the subject pipeline. Keep in mind that each marketable condition requirement is *independent* of the others. For example, gas may be in marketable condition with regard to pressure, but not for water content or sweetening.

The following diagram shows some of the equipment used to meet some of the marketable condition requirements. The top row shows those processes that ONRR may allow as deductions; the bottom row shows those activities that are never allowed as deductions under ONRR regulations:

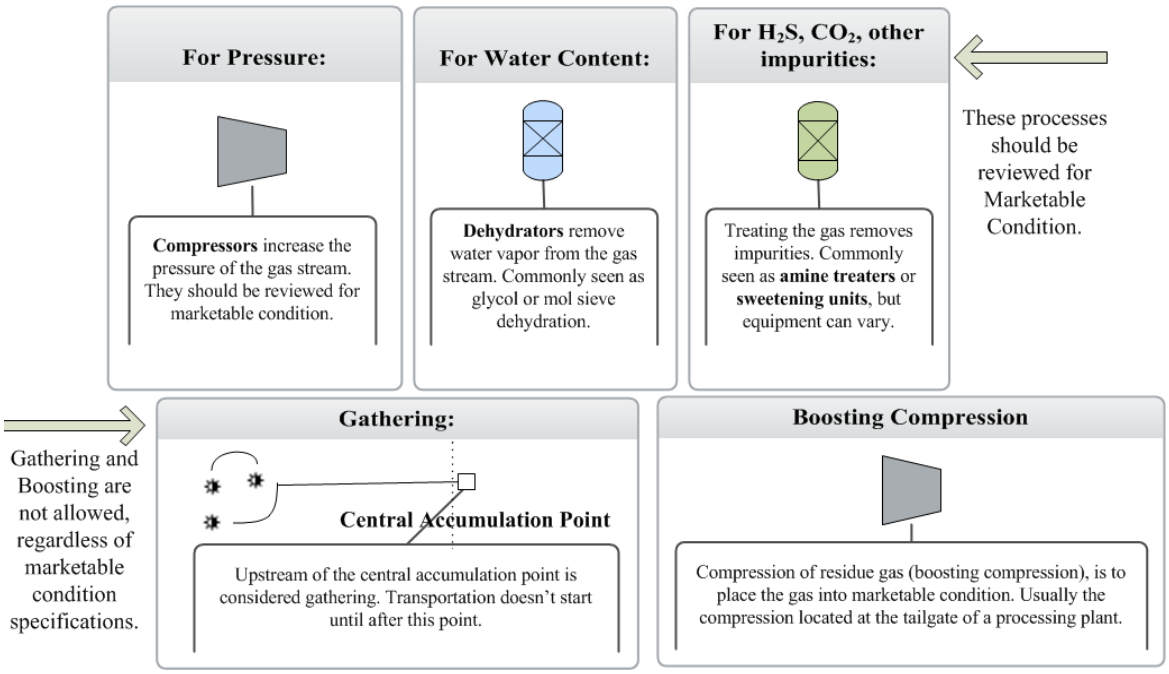

2.8.2 Gas in marketable condition at the wellhead

In rare instances, gas at the wellhead meets marketable condition requirements without the need for additional gathering, sweetening, dehydration, or compression. However, if a lessee claims that its product is in marketable condition based on the wellhead specifications (or any specification other than a high-pressure pipeline), the lessee has the burden to show that there is a real and active market for the production in that condition.

Further, the fact that the gas can be sold untreated at the wellhead does not mean that it is in marketable condition at the wellhead.

2.8.3 Gas sold to multiple markets

It is not uncommon to have multiple markets for gas within a particular field or area. These separate and distinct markets may call for differing degrees of conditioning (compression, dehydration, and sweetening) in order to satisfy pipeline specifications and requirements for each unique market. In these situations, gas must be placed into the marketable condition that is required for the market that it actually serves, even if other markets in the same location have less stringent requirements.

As an example, let us review the following image that has one gas well (identified by the sunburst to the left) with production being sent along the system to two separate gas plants and three separate mainline pipelines that have varying pressure requirements (from 600 psi at the tailgate of Gas Plant B, to 800 and 1,000 psi at the two mainlines at the tailgate of Plant A):

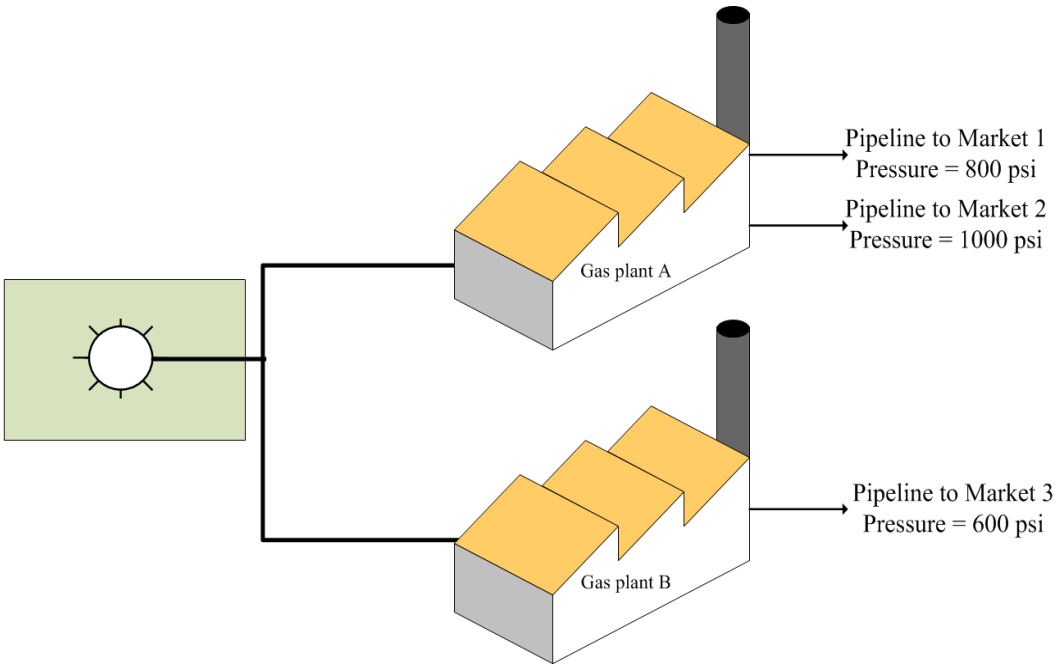

If the lessee of this well sells all of its production into each of the three markets, the lessee would be obligated to abide by the pressure requirements of *each* of the three pipeline pressure specifications: some production would have to enter the pipeline to Market 1 at 800 psi, some production would have to enter the pipeline to Market 2 at 1,000 psi, and some production would have to enter the pipeline to Market 3 at 600 psi. In particular, even though production is being processed from the same gas plant, the lessee must allocate costs based on the volume of gas sent to each pipeline. The lessee must determine marketable condition for each of these three markets.

The lessee is also obligated to market the production to the mutual benefit of the lessor and the lessee, whether the lessee uses its own employees to perform marketing services or pays another company to provide such services. If the purchaser incurs costs to market the production, the lessee cannot reduce the sales price to compensate the purchaser for those marketing costs. Neither can the lessee pay another entity for marketing services and deduct the costs of those services from the royalty value.

2.8.4 Allowable costs

Placing production in marketable condition includes the physical handling and treatment of production such as gathering, measuring, separating, compressing, sweetening, and dehydrating. If the lease's gross proceeds are reduced by any costs associated with handling or treating production, the gross proceeds must be increased by the amount of such deductions. However, certain costs may be permitted as either a transportation or processing allowance. Lessees must follow the procedures explained in the allowance chapters of this handbook.

A lessee is also not required to place production into marketable condition more than once at the lessee's expense, or to condition its production beyond specifications at the lessee's expense. ONRR will allow for transportation costs only if such handling exceeds those services necessary to place production into marketable condition required under 30 CFR §1206.55 for Indian oil.

2.9 Indian Forms

Form	Title
Form ONRR-4109	Gas Processing Allowance Report See 30 CFR §1206.180
Form ONRR-4110	Oil Transportation Allowance Report See 30 CFR §1206.58
Form ONRR-4295	Gas Transportation Allowance Report See 30 CFR §1206.178
Form ONRR-4411	Safety Net Report See 30 CFR §1206.172

2.10 Abbreviations

Acronym	Explanation
API	American Petroleum Institute
BIA	Bureau of Indian Affairs
BLM	Bureau of Land Management
Btu	British Thermal Unit - One Btu is the heat required to raise the temperature of one pound of water by one degree Fahrenheit
CA	Communitization agreement
CAP	Central accumulation point
CFR	Code of Federal Regulations
CO_2	Carbon dioxide
°F	Degrees Fahrenheit
DOI	United States Department of the Interior
FERC	Federal Energy Regulatory Commission
He	Helium
H_2S	Hydrogen sulfide
IBLA	Interior Board of Land Appeals
IBMP	Index Based Major Portion (price)
LCTD	Location and Crude Type Differential
Mcf	1,000 cubic feet
MMBtu	1,000,000 British thermal units (Btu)
N_2	Nitrogen
OGOR	Oil and Gas Operations Report - Form ONRR-4054
ONRR	Office of Natural Resources Revenue
PA	Participating area
PC	Product code
PSI	Pounds per square inch
PSIA	Pounds per square inch absolute
PSIG	Pounds per square inch gauge
RMP	Royalty Measurement Point/Point of Royalty Settlement
TC	Transaction code

2.11 Product Codes

Please note that Condensate (PC 02) is not a new product code for Indian valuation. However, ONRR will calculate an IBMP for condensate in each designated area where condensate is reported.

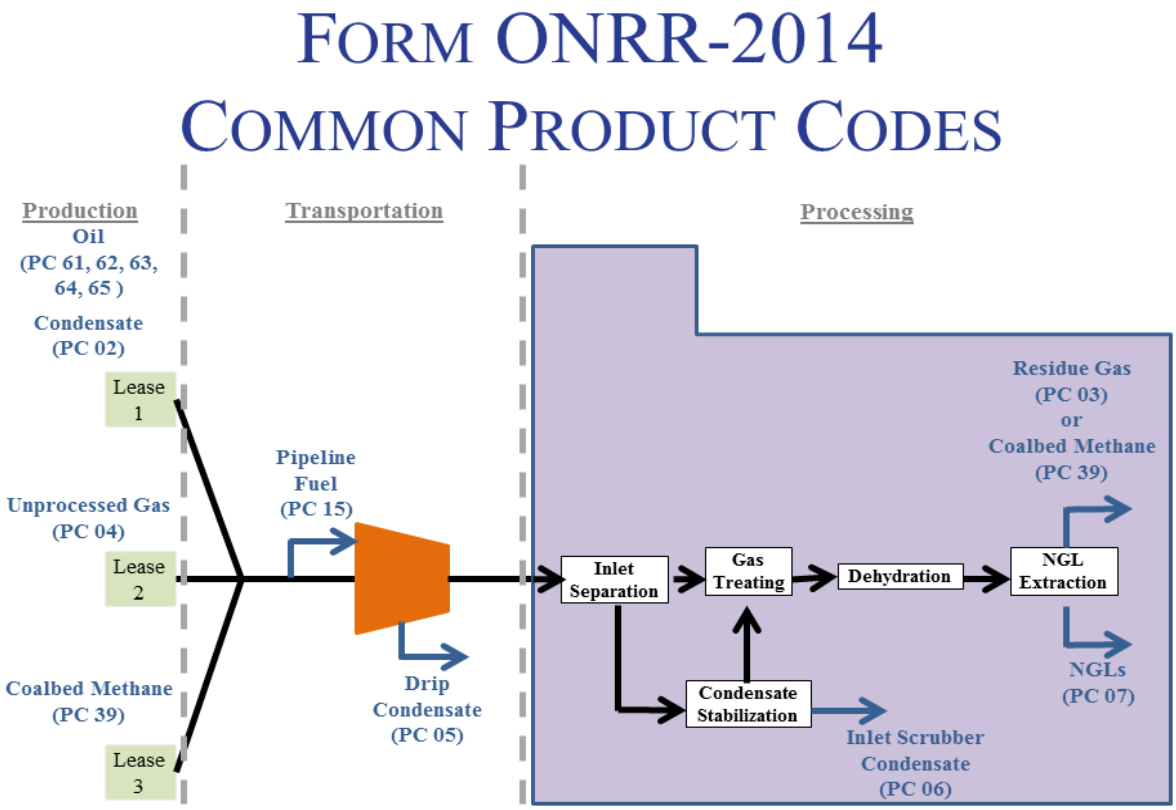

Last updated: April 22, 2019