Attachment E

"Analysis of the Department of Interior, Minerals Management Service's Form MMS-4415 under the Supplementary Proposed Rule Establishing Oil Value for Royalty Due on Federal Leases under the Paperwork Reduction Act," Barents Group, March 10, 1998.

ANALYSIS OF THE DEPARTMENT OF INTERIOR, MINERALS MANAGEMENT SERVICE'S FORM MMS-4415 UNDER THE SUPPLEMENTARY PROPOSED RULE ESTABLISHING OIL VALUE FOR ROYALTY DUE ON FEDERAL LEASES UNDER THE PAPERWORK REDUCTION ACT

PREPARED BY

BARENTS GROUP • LLC

A KPMG Company
2001 M Street, N.W.
Washington, DC 20036
202-467-3828

March 10, 1998

PREFACE

Barents Group LLC, a wholly owned subsidiary of KPMG Peat Marwick LLP, was retained by Gardere & Wynne LLP on behalf of a group of companies having significant crude oil production on Federal lands to assist in analyzing the Department of Interior, Minerals Management Service (MMS) further supplementary proposed rule establishing a new method for valuing oil for royalties due on Federal leases (63 F.R. 6113, published February 6, 1998). These companies are interested in and affected by the MMS proposal. This report addresses the issues raised by the further supplementary proposed rule and proposed Form MMS-4415 under the Paperwork Reduction Act (PRA).

For the purposes of this report, we have utilized certain terminology defined by MMS in its proposed rule, though we understand that these terms are not necessarily recognized or commonly used in the oil industry. The term "market center" is defined by MMS as "a major point MMS recognizes for oil sales, refining, or transshipment" – for example, St. James, Louisiana, and Guernsey, Wyoming. The term "aggregation point" is defined by MMS as "a central point where production is aggregated for shipment to market centers or refineries. It includes, but is not limited to, blending and storage facilities and connections where pipelines join. Pipeline terminations at refining centers also are classified as aggregation points." MMS proposes to publish periodically the aggregation points associated with each market center.

TABLE OF CONTENTS

PREFACE i

EXECUTIVE SUMMARY iii

1. INTRODUCTION 1

2. OVERVIEW OF PROPOSED, SUPPLEMENTARY PROPOSED, AND FURTHER SUPPLEMENTARY PROPOSED RULES 3

Original Proposed Rule 3
Supplementary Proposed rule 4
Modifications in Reporting Requirements 4
Modifications in Valuation Methodology 4
Further Supplementary Proposed Rule 5
Modifications in Reporting Requirements 5
Modifications in Valuation Methodology 6

3. MMS' BURDEN ESTIMATE 9

4. PROBLEMS WITH FORM MMS-4415 11

MMS Has Ignored Impact of Proposed Rule on Other Forms 11
Form Will Require Greater Effort to Complete than MMS Anticipates 12
Burden Placed on Companies with no Use for the Data 13
Large Systems Development and Implementation Costs Necessary 14
Contracts for Federal and Non-Federal Oil Not Distinguishable 14
Calculating Differential Based on Small Samples May not be Statistically Valid 14
Using Stale Price Differentials Based on Form MMS-4415 will not Lead to Accurate Valuations 15
Instructions Leave Room for Misinterpretation 16
MMS Has Not Yet Demonstrated How the Information it Collects on Form MMS-4415 Will Be Used Other than in a Very General Way 17

5. ROYALTY-IN-KIND ALTERNATIVE 19

6. CONCLUSION 20

EXECUTIVE SUMMARY

Barents Group LLC was retained by Gardere & Wynne LLP on behalf of a group of companies having significant crude oil production on Federal lands to assist in analyzing the Department of Interior, Minerals Management Service (MMS) further supplementary proposed rule establishing a new method for valuing oil for royalties due on Federal leases (63 F.R. 6113, published February 6, 1998). These companies are interested in and affected by the MMS proposal. This report addresses the issues raised by the further supplementary proposed rule and proposed Form and MMS-4415 under the Paperwork Reduction Act (PRA).

MMS initially published its original proposed rule on January 24, 1997, and in response to comments raised, MMS release the current version of the rule on February 6, 1998. Our preliminary analysis indicates that not only do many of the original problems remain but indeed the rule and proposed information collection creates new problems and burdens for those required to submit the form.

The further supplementary proposed rule requires that Form MMS-4415 be filed for arm's-length exchange contracts for Federal oil between MMS-specified market centers and aggregation points. MMS proposes to use the information collected on the form to calculate location/quality differentials between these "aggregation points" and "market centers."

MMS has estimated that the aggregate burden of filing this proposed form will be 4,597.5 hours annually for a total cost to industry of $160,912.50. This is significantly less than the burden estimated for the original form. If this estimate of burden is correct, MMS may have reduced the universe of respondents and its estimate of burden, but it has done so at the price of statistical accuracy and efficiency in valuation. It is far from clear, however, that the number of Forms MMS-4415 required to be filed between aggregation points and market centers has actually been reduced. Because of the virtual impossibility of distinguishing between Federal and non-Federal oil, a lessee would have to file a Form MMS-4415 for any arm's-length exchange between a market center and an aggregation point containing even one barrel of Federal oil. For those respondents that are required to file Form MMS-4415, the recordkeeping and paperwork burden will increase, and MMS' estimates are substantially understated.

Our preliminary analysis indicates that the form continues to raise numerous problems and issues, and it imposes substantial direct and indirect burdens on respondents:

- *MMS has ignored impact of proposed rule on other forms.* MMS is currently in the process of requesting a three-year extension of a currently approved information collection, Form MMS-2014. The further supplementary proposed rule will substantially increase the time and recordkeeping required to complete Form MMS-2014, and MMS has not even considered this additional burden.
- *Form MMS-4415 will require greater effort to complete than MMS anticipates.* Lessees do not currently know or retain the information required on Form MMS-4415 and could encounter serious problems in providing information to and receiving information from

affiliates which are separate legal entities. Additionally, MMS is imposing a new recordkeeping and audit requirement for non-Federal production in that it is reserving the right to review information related to the lessee's non-Federal production.

- *Burden placed on companies with no use for the data.* MMS is imposing a burden on one segment of the industry to regulate a different segment. Specifically, MMS is imposing the burden of completing Form MMS-4415 on lessees and their affiliates to actual differentials, who would not be required to use the published differentials, for use by lessees without such differentials. Additionally, by requiring Forms MMS-4415 to be filed for exchanges involving Federal production only, MMS is placing the almost impossible burden on those mid-stream marketing affiliates that conduct their own third-party trading activities to attempt to distinguish between Federal and non-Federal oil produced by affiliates and nonaffiliated lessees, while it is the Federal lessee to whom these regulations would apply.
- *Large systems and development cost necessary.* Companies may be required to invest in new computer systems or to integrate existing systems to track the required information.
- *Contracts for Federal and non-Federal oil not distinguishable.* The proposed rule requires that lessees file Forms MMS-4415 for exchange of Federal oil between aggregation points and market centers. Once production is commingled, lessees have no way to distinguish between Federal and non-Federal oil. If MMS intends to allow an allocation method, this will create a new area of uncertainty that will require further recordkeeping as well as the potential for audit.
- *Calculating differentials based on small samples may not be statistically valid.* Using MMS' estimated filing requirements, an average of 8 forms will be filed per aggregation point/market center pair. One must question average price differentials from such small samples of exchanges as being representative of market price differentials.
- *Using dated price differentials based on Form MMS-4415 will not lead to accurate valuations.* MMS' proposed method would result in certain lessees using location and quality differentials that do not reflect current market conditions and cannot therefore be the proper adjustments.
- *Instructions leave room for misinterpretation.* The instructions to Form MMS-4415 still do not fully answer all questions regarding the proposed form.
- *MMS has not yet demonstrated how the information it collects will be used other than in a very general way.* MMS description of how it will use the data collected on Form MMS-4415 is vague. More troubling, however, is that in response to a question at the February 18 hearing in Houston, an MMS official responded that they planned to wait to see the data before figuring out how to use it. He further confirmed that MMS has done no prototyping or pilot testing. OMB should carefully review this proposed information collection before approving MMS' attempt to impose this costly, burdensome and potentially market distorting system on Federal lessees.

The costs and inefficiencies that would be imposed on lessees by the further supplementary proposed rule and Form MMS-4415 are entirely avoidable and unnecessary because an active market exists for oil at the lease that would allow a more straightforward and less costly approach to royalty valuation. In addition, a serious, carefully developed, alternative approach is

now under Congressional consideration: royalty-in-kind. H.R. 3334 has been introduced which would mandate that the Federal government take its royalties in kind rather than in value. MMS itself, has studied the feasibility of royalty-in-kind in for natural gas in the Gulf of Mexico and due to the operational success of that program is starting pilot crude oil programs in Wyoming and offshore Texas. A properly structured royalty-in-kind program would allow the government to obtain the fair market value for production on Federal lands without the unnecessary administrative complexity and burden that would be imposed by MMS' further supplementary proposed rule.

1. INTRODUCTION

On January 24, 1997, the Minerals Management Service (MMS) published a proposed rule establishing oil value for royalty due on Federal leases and on sale of Federal royalty oil (62 F.R. 3742). In compliance with the Paperwork Reduction Act of 1995 (PRA) and other statutory and regulatory requirements, MMS estimated the regulatory burden associated with the proposed rule and solicited comments.

On March 25, the Domestic Petroleum Council, the Independent Petroleum Association of America, the Independent Petroleum Association of Mountain States, the Mid-Continent Oil and Gas Association, and the Rocky Mountain Oil and Gas Association submitted a report prepared by Barents Group LLC to the Office of Management and Budget (OMB) commenting on the proposed rule.[1] In response to these and other industry comments, as well as its own analysis, OMB denied MMS' request to collect information on proposed Form MMS-4415. The information to be collected on this form would be necessary to implement the proposed rule.

On July 3, MMS released a supplementary rule intended to address certain concerns raised during the comment period.[2] Barents prepared a report which reviewed the supplementary rule to analyze whether MMS had significantly reduced the paperwork burden. The report was submitted to OMB on August 4, 1997.[3] In reviewing the July 3 supplementary rule, we found that while MMS had addressed certain relatively minor issues, MMS had not addressed the substantive issues raised by the industry or by OMB. In addition, the supplementary rule created new problems. We addressed some of these new concerns in a May 28, 1997 submission to MMS that commented on an earlier draft of the supplementary rule.[4]

MMS reopened the comment period on September 22, 1997 and requested comments on alternatives suggested by commenters before proceeding with the rulemaking. During that comment period, MMS held a number of workshops to discuss these valuation alternatives.

On February 6, 1998, MMS released a further supplementary proposed rule after reviewing more than 2,600 pages of comments.[5] Barents has again been asked to prepare a report analyzing the reporting and recordkeeping burden associated with this revised rule. In reviewing the February

---

[1] "Preliminary Analysis of the Department of Interior, Minerals Management Service Proposed Rule Establishing Oil Value for Royalty Due on Federal Leases and on Sales of Federal Royalty Oil," March 25, 1997 as submitted by the Domestic Petroleum Council, the Independent Petroleum Association of America, the Independent Petroleum Association of Mountain States, the Mid-Continent Oil and Gas Association, and the Rocky Mountain Oil and Gas Association.

[2] 30 CFR Part 206 as published in the Federal Register, July 3, 1997, Volume 62, No. 128.

[3] "Analysis of The Department of Interior, Minerals Management Service Supplementary Proposed Rule Establishing Oil Value for Royalty Due on Federal Leases and on Sale of Federal Royalty Oil Under the Paperwork Reduction Act," August 4, 1997 as submitted by the Rocky Mountain Oil and Gas Association.

[4] "Analysis of the Department of Interior, Minerals Management Service Proposed Rule Establishing Oil Value for Royalty Due on Federal Leases and on Sales of Federal Royalty Oil," May 28, 1997 as submitted by the Rocky Mountain Oil and Gas Association.

[5] All references to the further supplementary proposed rule in this report refer to 30 CFR Part 206 as published in the Federal Register, February 6, 1998, Volume 63, No. 25.

1998 rule, we find that rule still contains many of the original problems associated with it and that this revised version creates additional problems.

We begin with an overview of the proposed rule, the supplementary proposed rule, and the further supplementary proposed rule (Section 2). Section 3 discusses the reporting requirements under the further supplementary proposed rule and MMS' estimate of the burden of complying with the proposed information collection. Section 4 discusses problems with proposed Form MMS-4415. Section 5 discusses a viable alternative, less burdensome approach under which the Federal government would take its royalties in kind. Finally, Section 6 presents our conclusions.

2. OVERVIEW OF PROPOSED, SUPPLEMENTARY PROPOSED, AND FURTHER SUPPLEMENTARY PROPOSED RULES

This section briefly discusses this proposed rule as it continues to evolve from its original form in January 1997 to its most recent iteration in February 1998.

ORIGINAL PROPOSED RULE

The original proposed rule sought to decrease reliance on posted prices and to develop rules for Federal royalty valuation which will better reflect market value of crude oil at the lease.[6] It retained the concept that for arm's-length sales, gross proceeds are the basis of royalty value, but it limited the application of this concept. The majority of sales would be subject to a new index methodology in which the royalty value is linked to either the New York Mercantile Exchange (NYMEX) futures price for West Texas Intermediate (WTI) at Cushing, Oklahoma or the Alaska North Slope (ANS) spot price for deliveries in either Los Angeles or San Francisco, depending on the location of production. The transactions required to use this new methodology include exchange agreements, reciprocal buy/sell agreements, non-arm's length transactions, sales to an affiliate refiner, and production subject to a crude oil call. The proposed rule would also require lessees to file a new form, Form MMS-4415, for all exchange agreements. The information collected on the new form would be used to calculate location/quality differentials between aggregation points and market centers.

Proposed Form MMS-4415, in its original version, would impose new reporting and record-keeping burdens on Federal lessees. Initially, the form must be submitted no later than two months after the effective date of the information requirement and then by October 31 of the year in which the rule takes effect and by October 31 of each succeeding year. The form requests information on the terms of the contract including: contract party name, contract type and ID, contract term, title transfer location, volume terms, crude quality (including API gravity and sulfur content), pricing terms, and quality adjustments.

Royalty valuation at the lease for non-arm's-length transactions was proposed as follows: Where oil is transferred to an affiliate who later sells it at arm's length, the value of the oil for royalty purposes would be either

1. the affiliate's arm's-length resale price (provided that neither the lessee nor its affiliate also purchases oil) or
2. a "monthly average" of the NYMEX futures price (for non-California and non-Alaska oil) or ANS spot price (for oil produced in California or Alaska), adjusted for location and/or quality differentials.

For all other cases (i.e., where the lessee or its affiliate refines the oil or disposes of it in a non-arm's-length transaction), only the second option would be available.

[6] All references to the original proposed rule in this report refer to 30 CFR Part 206 (62 FR 3742)

MMS describes three adjustments to the "monthly average" NYMEX futures price:

1. a "location/quality differential" between the "index pricing point" (for example, West Texas Intermediate (WTI) at Cushing, Oklahoma) and the appropriate market center (for example, Light Louisiana Sweet at St. James, Louisiana), calculated as the difference between the average monthly spot prices published in an MMS-approved publication for the respective locations;
2. a "location/quality differential" between the "market center" and a "major aggregation point" for oil from various sources, as either published by MMS or contained in the lessee's arm's-length exchange agreement (this adjustment would be based on data collected on Form MMS-4415) or the company's own differential on a buy/sell or exchange between a market center and an aggregation point; and
3. the actual costs of transportation (as determined under existing valuation rules) from the "aggregation point" to the lease, or from the "market center" to the lease if the oil flows directly to a "market center."

SUPPLEMENTARY PROPOSED RULE

On July 3, 1997, MMS published a supplementary proposed rule which modified the eligibility requirements for oil valuation for arm's-length transactions and the procedures for collection of exchange information.[7] It also amended the list of aggregation points. This section discusses changes to the proposed rule contained in the supplementary proposed rule.

Modifications in Reporting Requirements

The supplementary proposed rule did not significantly change the reporting requirements of proposed Form MMS-4415. It contained no changes to either the proposed form or its instructions. The only change in reporting requirements was that MMS would only require Form MMS-4415 to be filed for transactions between an aggregation point and a market center and would not require a Form MMS-4415 to be filed for oil exchanged at the lease.

Modifications in Valuation Methodology

Under the supplementary proposed rule, MMS would require that all production subject to a crude oil call be valued using the proposed index methodology. MMS received many comments regarding oil subject to crude oil calls; crude oil calls are frequently not exercised, and when they are exercised, the purchaser must typically match or exceed the price offered by the highest bidder. In these cases, MMS would not require the oil to be valued using an index pricing method. The supplementary proposed rule amended 30 CFR 206.102(a)(4) to require index valuation only in situations involving non-competitive crude oil calls and added a definition of a non-competitive crude oil call in 30 CFR 206.101. The supplementary proposed rule also deleted 30 CFR 206.102(a)(6), as proposed in January, to address the issue that disallowing

[7] 62 FR 36030

producers who purchased small quantities of oil for on-lease and other uses from using the gross proceeds method was too restrictive.

MMS proposed a new paragraph (a)(6) to allow producers who exchange oil with a non-affiliated entity, and then sell the oil in an arm's-length transaction, to value that oil using gross proceeds or to choose to use an index methodology. This paragraph would only apply if there is a single exchange agreement before the arm's-length sale.

MMS also proposed to exclude an additional category of arm's-length transactions from gross proceeds valuation. The preamble states "[t]hat these are situations where two parties transact purchases and sales of oil that would appear to be arm's length. However, the prices are below market for the field or area. Neither party cares because they agree to sell roughly equivalent volumes to one another..."[8] In this situation, referred to as an "overall balance" situation, the supplementary proposed rule amended 30 CFR 206.102(a)(4) to require the oil to be valued based on index value.

Finally, MMS amended 30 CFR 206.102(a)(1) to clarify that the exceptions to valuing oil based on gross proceeds should be applied on a contract-by-contract or transaction-by-transaction basis.

FURTHER SUPPLEMENTARY PROPOSED RULE

On February 6, 1998, MMS published a further supplementary proposed rule which retains the concept of index pricing but requires the use of spot prices published for the market center nearest the lease for oil most similar in quality to the lease production rather than NYMEX. Additionally, it divides the United States into three geographic regions for purposes of valuing oil disposed of in non-arm's-length transactions for Federal royalty purposes. The use of an Alaska North Slop (ANS) index for production from Alaska and California was retained from the original proposed rule.

Modifications in Reporting Requirements

The further supplementary proposed rule proposes a slightly modified Form MMS-4415 which would need to be filed for all the lessee's and their affiliates' crude oil production from Federal leases which is exchanged under arm's-length exchange agreements between paired aggregation points and market centers. The revised form requests the following information: lessee name and address; lessee payor code; reporting period; contract party name; exchange party payor, if available; contract type and contract number; the effective date, initial term, and expiration terms of the contract; the aggregation point and market center; the volume of oil transferred or received; the exchange differential received or paid; and certain quality information and adjustments including API gravity (either deemed or actual), the gravity adjustment received or paid, the actual or deemed sulfur content, the sulfur adjustment received or paid, and any other quality adjustment and the amount received or paid.[9]

---

[8] 62 FR 36031

[9] Proposed Form MMS-4415 and the instructions can be found in Appendix 1.

Modifications in Valuation Methodology

Under the further supplementary proposed rule, the value of crude oil for royalty purposes is the gross proceeds accruing to the seller less applicable allowances.[10] This also applies if oil is transferred under multiple arm's-length exchange agreements and is ultimately sold at arm's length, regardless of the number of arm's-length exchange agreements before the final sale. The following adjustments are allowed for arm's-length sales:

- A location/quality differential determined from an arm's-length exchange agreement reflecting the difference in value between an aggregation point and a market center or between a lease and a market center;
- Actual transportation costs between an aggregation point and a lease; and
- Quality adjustments based on premia or penalties determined by pipeline quality bank specifications at intermediate commingling points, at the aggregation point, or at the market center that applies to the lease.

There are four exceptions to gross proceeds rule, and these include:

1. MMS may require the lessee to value oil as non-arm's length, if MMS determines arm's-length contract does not reflect the total consideration actually transferred;
2. The lessee must value oil as non-arm's-length if MMS determines that gross proceeds does not reflect a reasonable value because of misconduct by either party to the arm's-length contract or a breach of the duty to market the oil for the mutual benefit of the lessee and lessor;
3. Oil is disposed of under a non-arm's-length exchange; or
4. Oil is subject to a noncompetitive crude oil call.

Oil falling under these exceptions must be valued using the methodology for non-arm's-length transactions. There would be many more arm's-length transactions under the further supplementary proposed rule than under the original proposed rule, particularly for integrated lessees, and very likely more than MMS assumes. Many of these transaction would occur far downstream of the lease.

The non-arm's-length methodology is now separated into three regional schemes. For production in California and Alaska, the value of crude oil would be the average of the daily mean ANS spot prices adjusted for applicable location and quality differentials and possibly for transportation costs.

[10] Note that gross proceeds is a defined term that is not the same as the definition of gross proceeds under current regulations. As Ben Dillon, Vie President of the Independent Petroleum Association of America, noted in his comments at the MMS hearing on the further supplementary proposed rule on February25, 1998, "[MMS] inserted into gross proceeds the word "market" and implied duty vs. marketable condition."

In the Rocky Mountain Area, crude oil would be values using a system of four benchmarks :

1. Values established by an MMS-approved tendering program;
2. The volume-weighted average gross proceeds received;
3. The average of daily NYMEX futures prices adjusted for applicable location and quality differentials and possibly for transportation; or
4. An alternative established by the MMS Director.

The rest of the country would use average daily mean spot prices for the market center nearest the lease where spot prices are published in an MMS-approved publication for the crude oil most similar in quality to the lease production. This spot price must then be adjusted for location and quality differentials and may be adjusted for transportation costs. MMS is proposing to not allow the deduction of any costs of marketing production .

The following deductions would be allowed for oil valued using these non-arm's-length methodologies:

- If production moved directly to alternate disposal point:
  - Actual transportation costs between the aggregation point and the lease (Treat alternate disposal point as aggregation point);[11]
  - Quality adjustments based on premia or penalties determined by pipeline quality bank specifications at intermediate commingling points, at the aggregation point, or at the market center that applies to the lease.[12]
- If production moved directly to an MMS-identified market center:
  - Actual transportation costs between the market center and the lease;[13]
  - Quality adjustments based on premia or penalties determined by pipeline quality bank specifications at intermediate commingling points, at the aggregation point, or at the market center that applies to the lease.[14]
- If production neither moved to an alternate disposal point or to a market center:
  - An MMS-specified location/quality differential determined from arm's-length exchange agreement that reflects difference in value of crude oil between the aggregation point and the market center;[15]
  - MMS will publish annually a series of differentials applicable to various aggregation points and market centers based on data collected on Form MMS-4415. MMS will calculate each differential using a volume-weighted average of differentials reported for similar quality crudes for the aggregation point market

[11] Proposed Section 206.112(c)
[12] Proposed Section 206.112(e)
[13] Proposed Section 206.112(d)
[14] Proposed Section 206.112(e)
[15] Proposed Section 206.112(b)(1)

center pair for the last year. These differentials will be used for that calendar year.[16]

- ◊ Actual transportation costs between the aggregation point and the lease (Treat alternate disposal point as aggregation point);[17]
- ◊ Quality adjustments based on premia or penalties determined by pipeline quality bank specifications at intermediate commingling points, at the aggregation point, or at the market center that applies to the lease.[18]

[16] Proposed Sections 206.112(b)(2) and (3)
[17] Proposed Section 206.112(c)
[18] Proposed Section 206.112(e)

3. MMS' BURDEN ESTIMATE

This report focuses on the burden imposed by the reporting requirements under the further supplementary proposed rule, specifically the burden imposed by Form MMS-4415.[19] This rule requires lessees to submit differential information on any oil produced from Federal leases and exchanged under arm's-length agreements between aggregation points and market centers. The instructions to the form state that a Form MMS-4415 must be completed for each arm's-length contract in effect during the previous 12 months and involving Federal oil.

All Federal lessees (or their affiliates as appropriate) must initially submit Form MMS-4415 no later than two months after the effective date of this reporting requirement and then by October 31 of the year in which the regulation takes effect and by October 31 of each succeeding year.

MMS estimates that almost all Federal lessees who will be required to file Forms MMS-4415 will have total annual domestic production in excess of one million barrels.[20] In 1996, 59 lessees had production in excess of one million barrels. MMS divides these 59 companies into three groups: 13 companies with total annual domestic production in excess of 30 million barrels, 11 companies with total annual domestic production between 10 and 30 million barrels, and 35 companies with total annual domestic production between 1 and 10 million barrels.

MMS estimates that the burden for the thirteen larger companies with greater than 30 million barrels of annual domestic production will be 2,405 hours. It estimates that these companies will have approximately 1,000 exchange agreement contracts and will have to report on 100 exchange agreement contracts following a review of all the company's exchange agreement contracts. MMS estimates that the burden of fulfilling the information collection for a large company will be 185 hours. This includes 80 hours to aggregate the exchange agreement contracts to a central location, 80 hours to sort the exchange agreement contracts, and 25 additional hours to extract the relevant data and complete Form MMS-4415. This adds up to the total burden of 2,405 hours for the 13 large companies for a total of $84,175.[21]

For 11 mid-sized companies with annual domestic production between 10 and 30 million barrels, MMS estimates that the aggregate annual burden will be 1,168.75 hours. MMS estimates that these companies will have approximately 250 exchange agreement contracts that they will have to review to identify the contracts relevant for reporting purposes. MMS estimates that Forms MMS-4415 would need to be filed for 25 of those 250 contracts. The estimated reporting burden is 106.25 hours. This includes 60 hours to aggregate the exchange agreement contracts to a central location, 40 hours to sort the exchange agreement contracts, and 6.25 hours to extract the relevant information and complete Form MMS-4415.

For the 35 smaller companies with less than 10 million barrels annual domestic production, MMS estimates that each company will have to review 50 exchange agreement contracts and

[19] See Appendix 1
[20] 63 FR 6124
[21] MMS assumes a labor cost of $35 per hour.

will be required to report on 5 of those. The burden estimate is 29.25 hours per company: 20 hours to aggregate the exchange agreement contracts to a central location, 8 hours to sort the contracts, and 1.25 hours to extract the information and complete the forms. The following table summarizes MMS' estimates of the burden.

Table 1
MMS' Estimate of the Reporting Burden of Form MMS-4415

Company Size	Number of Federal Lessees	Burden Hours per Company	Total Hours	Cost
Large	13	185.00	2,405.00	$84.175.00
Mid-size	11	106.25	1,168.75	$40,906.25
Small	35	29.25	1,023.75	$35,831.25
Total	59		4,597.50	$160,912.50

It is far from clear, however, that the reporting burden will be limited to the 59 companies with over one million barrels of annual domestic production. Because of the virtual impossibility of distinguishing between Federal and non-Federal oil, a lessee would have to file a Form MMS-4415 for any arm's-length exchange between a market center and an aggregation point containing even one barrel of Federal oil. As a result, the number of forms that will be filed will be the same as would have been filed between aggregation points and market centers under the original proposed rule, and so such a drastic reduction from the original burden estimate (86 percent) cannot be accurate.[22] We also believe that the original estimate was significantly understated.[23] As such, MMS is likely to be substantially underestimating the burden of complying with this information collection. Some of the limitations, deficiencies, and inaccuracies in MMS' burden analysis are discussed in the next section.

[22] MMS originally estimated a burden of 32,000 hours per year for an annual cost of $800,000. (62 FR 3750)
[23] "Preliminary Analysis of the Department of Interior, Minerals Management Service Proposed Rule Establishing Oil Value for Royalty Due on Federal Leases and on Sales of Federal Royalty Oil," March 25, 1997 as submitted by the Domestic Petroleum Council, the Independent Petroleum Association of America, the Independent Petroleum Association of Mountain States, the Mid-Continent Oil and Gas Association, and the Rocky Mountain Oil and Gas Association.

4. PROBLEMS WITH FORM MMS-4415

While MMS has modified Form MMS-4415 from its original submission in January 1997, the form continues to raise numerous problems and issues, and it imposes substantial direct and indirect burdens on respondents. This section presents our preliminary analysis of the burden associated with Form MMS-4415.

MMS HAS IGNORED IMPACT OF PROPOSED RULE ON OTHER FORMS

MMS has neither recognized nor taken into account the impact of this proposed rule on other MMS information collections. MMS had consistently ignored a significant burden in calculating its estimates of the time required to comply with this rule. As one significant example, the agency has made no mention of the impact this proposed rule would have on the time required to calculate value or to complete Form MMS-2014, where the burden imposed would be substantial. Barents raised this concern in our first report[24] filed on this issue almost one year ago, yet MMS has chosen not to address the impact this proposed rule would have on its other currently approved information collections.

MMS is currently in the process of requesting a three-year extension of a currently approved information collection, Form MMS-2014. Barents recently filed a report discussing the substantial increase in burden associated with Form MMS-2014 under the proposed rule.[25] The key findings of the report were:

- MMS' estimate of the burden imposed by this information collection is mathematically incorrect. Using MMS' published data, we calculate that the compliance burden will be 238,600 hours annually — 54 percent higher than reported by MMS.
- The further supplementary proposed rule will substantially increase the time and recordkeeping required to complete Form MMS-2014.
- Form MMS-2014 generally assumes that there will be one type of disposition and valuation methodology used for any one lease; that is, production will be sold in one way. Under the proposed rule, a lessee would be required to value the production from that lease in two ways: using the proposed gross proceeds methodology and using an index methodology. This would require that the values for the arm's-length transaction and the non-arm's-length transaction be reported on separate lines of Form MMS-2014.

While the discussion of the impact of the proposed rule on Form MMS-2014 was preliminary, our analysis indicates that there would be a substantial increase in the time required to complete Form MMS-2014. Form MMS-2014 is already the most burdensome of the currently approved

---

[24] See "Preliminary Analysis of the Department of Interior, Minerals Management Service Proposed Rule Establishing Oil Value for Royalty Due on Federal Leases and on Sales of Federal Royalty Oil," March 25, 1997 as submitted by the Domestic Petroleum Council, the Independent Petroleum Association of America, the Independent Petroleum Association of Mountain States, the Mid-Continent Oil and Gas Association, and the Rocky Mountain Oil and Gas Association.

[25] See "Analysis of the Department of Interior, Minerals Management Service's Request for Extension of the Existing Collection Authority for Form MMS-2014" filed by Gardere & Wynne, L.L.P. on March 6, 1998.

MMS information collections,[26] and the proposed rule, in addition to imposing a new information collection, will make completing Form MMS-2014 more burdensome.

FORM WILL REQUIRE GREATER EFFORT TO COMPLETE THAN MMS ANTICIPATES

Form MMS-4415 requires information to be reported that the producing entities that pay and report royalties do not currently know or retain. Additionally, lessees are likely to encounter serious problems in providing information to and receiving information from affiliates that are separate legal entities. There are significant questions regarding their ability to provide and receive information in some cases – especially, where the downstream affiliate of a producer is less than 100-percent owned by the leaseholder or where the leaseholder has an equity interest in an inter-state pipeline. The proposed rule modifies the definition of an affiliate to be a "person who owns, is owned by, or is under common ownership with another person to the extent of 10 percent or more of the voting securities of an entity, interest in a partnership or joint venture, or other forms of ownership."[27] By defining affiliation in this overly broad manner, substantial compliance costs are imposed upon the industry, and the information sharing that MMS would require between less than 100-percent owned affiliates of questionable legality. Most larger oil producing companies have separate affiliates engaged in production, marketing, and transportation activities, in addition to integrated companies having other downstream entities. It is not uncommon for affiliated entities to be less than 100-percent owned.

Regardless of the degree of ownership, affiliated entities often have separate record-keeping, accounting, and administrative systems that do not readily communicate with each other. In most cases, computer and recordkeeping systems are not integrated, and indeed, it is typically the case that personnel from different affiliates have little knowledge of the operational characteristics of systems maintained by other affiliates.

A large manual effort will be necessary to collect data of the nature required on Form MMS-4415 and will potentially involve several different company departments. It will require that an exchange agreement contract between an aggregation point and a market center be traced back to a lease which will be a difficult, if not impossible, task. Once oil leaves a lease and is commingled, there is no certain way to trace it back to that lease.

Because any arm's-length sale will require the use of gross proceeds, the proposed rule will trigger a tracing requirement, even after multiple transactions downstream of the lease. In recent years, changes in the marketplace have resulted in many transactions of integrated companies being ultimately disposed of at arm's length. As a result, these companies will be forced to trace a large number of transactions with multiple arbitrary adjustments to determine a net back value at the lease. Many integrated companies have affiliates in the trading business that are engaged in arm's-length transactions with third party lessees where their production will be commingled with the upstream affiliate's own production. By requiring Forms MMS-4415 to be filed for

[26] The OMB inventory of active information collections approved under the Paperwork Reduction Act presents estimates of annual burden hours for all approved information collections. According to that inventory, Form MMS-2014 has the highest annual estimate of all MMS' approved information collections.
[27] 63 FR 6126

exchanges involving Federal production only, MMS is placing the almost impossible burden on those mid-stream marketing affiliates that conduct their own third-party trading activities to attempt to distinguish between Federal and non-Federal oil produced by affiliates and nonaffiliated lessees, while it is the Federal lessee to whom these regulations would apply.

MMS imposes a new recordkeeping and audit requirement for non-Federal production in the preamble to the supplementary proposed rule. MMS states that it "reserves the right to review information related to [the lessee's] non-Federal production."[28] This is not an illogical requirement in that the proposed rule would appear to require arbitrary and ad hoc allocation decisions in determining the value of commingled Federal and non-Federal production. As a result, lessees would be required to expend additional effort not only to gather information for Federal production exchanged between MMS-specified aggregation points and market centers, but also to have available for review or audit the same information for all non-Federal production that may be included in a commingled stream.

The rule requires respondents to submit Form MMS-4415 no later than two months after the effective date of the rule and then by October 31 of the year the regulation takes effect and by October 31 of each succeeding year. This will require the respondents to make duplicate submissions in the first year. As this is an annual filing requirement, why not make the annual due date one year from the initial due date. As currently structured, the rule imposes a large burden on lessees to comply with the initial filing and then requires them to submit duplicate information less than one year later.

BURDEN PLACED ON COMPANIES WITH NO USE FOR THE DATA

The proposed reporting requirement places the reporting burden on lessees who would generally not be required to use the published differentials with the result that lessees will be required to undertake a large effort to provide information for use by other companies. Companies reporting actual location and quality differentials on Form MMS-4415 will use their actual differentials to adjust spot prices when valuing using an index methodology. The published differentials, computed from their filings, will be used by companies without their own, actual differentials. As a result, MMS is effectively imposing a burden on one segment of the industry to regulate a different segment.

The further supplementary proposed rule also places a burden on mid-stream marketers who would be required to attempt to distinguish between Federal and non-Federal production upon final sale. When a mid-stream marketer receives crude oil, it does not know whether it is receiving Federal crude, and indeed, it has no reason to know whether the production is Federal or non-Federal. This proposed rule is intended to regulate how value is calculated for Federal royalty purposes, and is imposing a large burden on mid-stream marketing affiliates, not the entities it is intending to regulate.

---

[28] 63 FR 6123

LARGE SYSTEMS DEVELOPMENT AND IMPLEMENTATION COSTS NECESSARY

As noted in MMS' statement to OMB regarding the costs of the proposed rule, MMS stated that they "... do not anticipate any additional capital or start-up costs will be needed to provide the requested information."[29] As stated above, the required information is not currently known or retained by the entity paying and reporting royalties. As a result, the form would require the lessee to use additional manpower and computer support to complete. In order to efficiently complete Form MMS-4415, companies may be required to invest in new computer systems or integrate existing systems to track the required information. This would impose large up front costs and the on-going costs of keeping the data in the system current.

CONTRACTS FOR FEDERAL AND NON-FEDERAL OIL NOT DISTINGUISHABLE

MMS would require that lessees (or their affiliates as appropriate) complete Forms MMS-4415 for all arm's-length exchange agreement contracts for Federal oil between named aggregation points and market centers. This requirement effectively calls for the direct tracing of barrels, which is physically impossible. While a lessee will know at the lease whether crude oil is from a Federal or a non-Federal lease, once that production leaves the lease and is commingled with other production, there is no way to distinguish between Federal and non-Federal oil.

MMS defines an aggregation point as "a central point where production is aggregated for shipment to market centers or refineries. It includes, but is not limited to, blending and storage facilities and connections where pipelines joint. Pipeline terminations also are classified as aggregation points."[30] Thus, by definition, at an aggregation point, production is aggregated and Federal and non-Federal production is most likely commingled. As a result, providing completely accurate and verifiable information on Form MMS-4415 on exchange agreement contracts involving only Federal production may not be possible.

While MMS may suggest that a reasonable allocation method be used, no guidelines have been provided on how this should be done. As a result, MMS is creating a new area of uncertainty that will require further recordkeeping as well as the potential for audit and controversy.

CALCULATING DIFFERENTIAL BASED ON SMALL SAMPLES MAY NOT BE STATISTICALLY VALID

In our earlier reports filed with the Office of Management and Budget and MMS, we discussed the potentially serious statistical problems raised by MMS' proposed approach to computing "location/quality" differentials using the information filed by lessees. Among these is the problem of small samples in cases where few lessees engage in exchange agreements between particular pairs of aggregation points and market centers, or where a relatively small volume of oil is involved. If MMS' assumptions about the number of forms to be filed were to be correct, this problem is more acute under the supplementary proposed rule. If MMS is correct in estimating that Forms MMS-4415 will need to be filed for 1,750 exchange agreement contracts, and there are 218 market center/aggregation point pairs, an average of 8 forms will be filed per

[29] "Supporting Statement for Paperwork Reduction Act on Oil Location Differential Report," page 9.
[30] 63 FR 6126

aggregation point/market center pair. Normal marketplace variation means that there will probably be many more than 8 forms for some pairs and only one or two for other pairs. This could result in large valuation errors where a single large producer exchanges its production in a non-arm's-length transaction for use in its own refinery. If the required differential is based on another producer's exchange in an arm's-length transaction involving a small quantity of production — perhaps even of a different quality — there is no reason to believe that the published differential will be correct or even reasonable when applied to the much larger production stream. From a statistical viewpoint, one must question the accuracy of average price differentials from such small samples of exchanges as being representative of market price differentials for that aggregation point/market center pair.

The filing requirement may distort the market in ways that will thwart MMS' efforts to collect reliable and representative data. MMS' further supplementary proposed rule may effectively force some smaller companies to choose to restructure transactions so that they will not trigger a costly Form MMS-4415 filing requirement. MMS may find that only one, two, or perhaps no companies at all provide relevant data for some aggregation point/market center pairs. The smaller number of responses would make such estimates unreliable and lead to inaccurate royalty valuations for those lessees required to rely on that information.

Market distortions will result where one company is required to use its current own arm's-length contract oil price differentials in lieu of the published MMS differentials, while competitors who do not have their own actual differentials would be forced to use average differentials in existence during the prior year for otherwise identical crude oil. The actual impact of this requirement will effectively be random creating marketplace advantages in some years and disadvantages in other years.

USING STALE PRICE DIFFERENTIALS BASED ON FORM MMS-4415 WILL NOT LEAD TO ACCURATE VALUATIONS

In its PRA supporting statement, MMS states that "[t]he requested/collected information provides a critical link to estimating the proper value of oil from Federal lands. A crucial piece of the valuation equation relies on adjusting the value at a given market center by the proper location and quality differential."[31] MMS' proposed method would result in certain lessees using location and quality differentials that do not reflect current market conditions and cannot therefore be the *proper* adjustments.

MMS would publish its calculations of "location/quality differentials" between market centers and aggregation points just once per year, based on the annual filing of Form MMS-4415. This means that in any given month the royalty value calculated for a volume of lease crude will be based on local market conditions that prevailed up to a year ago, or more. In reality, price levels and relationships fluctuate constantly based on continual changes in local supply and demand factors. For example, an increase in refining capacity in one location could have an impact on either location or quality differentials that would be reflected in the MMS-calculated allowances with a one-year lag. Similarly, the initiation of production from a significant new field –

[31] "Supporting Statement for Paperwork Reduction Act on Oil Location Differential Report." Page 6. Item 6.

especially one whose crude has characteristics that are significantly different from the types typically sold in the local market – could significantly alter value relationships among different kinds of crude in the local market or between the local market and other markets.

By mandating that the oil industry base monthly royalty payments in certain cases on annualized price differential estimates from the prior year that do not reflect current market conditions, MMS is imposing significant risks on the lessees. Changes in price differentials relative to the previous year could be either in the Federal government's favor or in an individual lessee's favor. There is no reason to believe that these gains and losses would average out for any individual lessee, so that lessees will be left unnecessarily exposed to a new risk unrelated to their own commercial transactions. While MMS claims that this process will add certainty to royalty valuation, it actually would create new risks and uncertainties for lessees.

Additionally, MMS proposes that the form *only* be submitted once a year. The collection of data on changes in contract terms is needed to assure the statistical accuracy of MMS' calculations, and so while requiring only an annual submission reduces the burden on respondents, it is at the cost of the loss of statistical accuracy.

In general, then, the "location/quality differentials" to be published by MMS will not represent accurate adjustments that reliably bring spot price-based valuations in line with the range of market values of the oil that is sold by Federal leaseholders. They will provide a cloudy picture of the quality and location adjustments implicit in the terms of exchange agreement contracts, and they will be too old to reflect current market conditions when the oil is actually sold.

INSTRUCTIONS LEAVE ROOM FOR MISINTERPRETATION

The instructions to Form MMS-4415 are still not as clear as they ought to be and seem to raise new issues. In the first paragraph, the instructions states that "differentials may be related to quality, *volume*, or location" [emphasis added]. Volume is not mentioned as a differential anywhere else in the proposed rule.

Item 1 on Form MMS-4415 requests the name of the other party to the exchange agreement and that party's MMS payor code, if known. There is a potential here for double counting if both parties are reporting the exchange. In the second item, MMS does request a contract number, and states that this item is important as MMS must identify cases where two sides of an exchange are reported so that the information will not be used twice. A contract number, however, is generally an internal company number; i.e., it would be a different number for each of the parties to a single transaction. It would, therefore, have no value to MMS or any third party for identifying the contract. As a result, even requiring this number will not necessarily eliminate the potential for double counting. It will only be of value if MMS intends to audit these forms.

The instructions for item 3 state that for contracts that are month-to month extensions, if the same contract is in effect as when the last report was filed, the lessee does not need to fill out the rest of the form, but rather can just check "no change" and sign the form. MMS does not address what would happen in this situation if the volumes have changed under that same contract. If the

lessee simply checked no change, MMS would not have current volume information with which to weight the differentials and will get an incorrect volume-weighted differential.

Item 4 of the instructions relates to identifying the exchange pair, and the instructions leave room for misinterpretation. The instructions state that "[f]or in/out transportation exchanges, only the company who is contracting for the transportation exchange will need to report the exchange. For other exchanges, both parties *may be* required to report on the exchange if they are both Federal lessees and if both volumes of oil in the exchange involve oil from Federal leases" [emphasis added]. The instructions do not specify the criteria for being required to report the exchange. Are the criteria simply that both parties to the exchange are Federal lessees and both volumes are Federal oil, or are there additional criteria? What both parties are Federal lessees where one exchanges production from private lands and unknowingly receives a commingled stream that includes an unknown volume of production from Federal leases? Who is responsible for any failure to file?

Information of quality and quality-related adjustments are discussed in item 7, but neither the form nor the instructions provide any guidance on what a lessee must do if the quality of the oil changes over the course of a contract. What happens, for example, if production becomes increasingly sour over the term of the contract?

Finally, Form MMS-4415 fails to collect any information on non-quality related adjustments. Factors not related to quality can affect the price a buyer is willing to pay for crude oil and MMS appears to ignore all such factors.

MMS HAS NOT YET DEMONSTRATED HOW THE INFORMATION IT COLLECTS ON FORM MMS-4415 WILL BE USED OTHER THAN IN A VERY GENERAL WAY

MMS' description of how it will use the information collected on Form MMS-4415 provides more information than previous versions of the rule, but still leaves many questions unanswered. MMS states that it will:

> *calculate each differential using a volume-weighted average of the differentials reported on Form MMS-4415 for similar quality crudes for the aggregation point-market center pair for the previous reporting year. MMS may exclude apparent anomalous differentials from that calculation. MMS will publish differentials for different crude oil qualities that are identified separately on Form MMS-4415 (for example, sweet versus sour or varying gravity ranges).*[32]

MMS does not define what it means by an "anomalous differential." With an average of only 8 Forms MMS-4415 to be filed per aggregation point-market center pair, excluding any differentials further reduces the statistical accuracy and validity of this small sample size. If MMS is allowed to exclude any anomalous differentials without the establishment of any criteria or standards, the agency opens itself to charges of being capricious and arbitrary.

[32] 63 FR 6130-31

MMS also does not specify what the reported gravity ranges will be and does not qualify what it means by sweet or sour; both are very broad categories. Additionally, given how few responses MMS can expect for each aggregation point-market center pair, further delimiting the information collected for each pair could mean that MMS could receive forms reporting as few as one or two differentials for a given quality of oil for a give market center/aggregation point pair. In this case, in order to publish differentials, MMS could reveal differentials for as few as one or two transactions. MMS also provides no information on how it will handle oil qualities for which they receive no information. The limited data could easily exclude certain qualities of oil or provide only limited data for each quality. Clearly, one reported transaction could not be representative of all other transactions between any aggregation point and market center. MMS needs to provide detail on how it will address these issues of statistical validity before proceeding with this rule.

Additionally, in its supporting statement for the PRA on Form MMS-4415, MMS states that the information provided on the form is proprietary and "will be exempt from disclosure by the Freedom of Information Act, 5 U.S.C. 552, or other Federal law."[33] As such, MMS presumably could not routinely release the data for any one transaction for a aggregation point-market center pair and would need to develop specific procedures for cases in which disclosure could be an issue. Indeed, if MMS releases data based on two Form MMS-4415 filings, the same issue will arise where by subtracting its own data, one competitor will be able to calculate the differential for the other. MMS has not demonstrated that it has considered this issue, and given how small the sample will be, it is an issue that must be considered before proceeding with this information collection.

In some instances, Form MMS-4415 asks for either actual or deemed API gravity and sulfur content. MMS fails to indicate how it will use deemed differentials. It is unclear if they will be combined with actuals and, therefore, inherently assumed to be actuals or if the MMS will treat them separately. If, for example, all reported transactions for a given market center/aggregation point pair are based on deemed differentials, how can there be any assurance of accuracy when applied to any other transaction? This must be explained before MMS proceeds with collecting this information. Finally, MMS is requesting information on "any other value adjustments due to quality components other than gravity or sulfur content." It is unclear how such adjustments will be used.

MMS has not carefully considered how the information collected will actually be used. In response to a question at the February 18 hearing in Houston, an MMS official said that they planned to wait to see the data before they figure out how to use it. He further confirmed that they have done no prototyping or pilot testing. OMB should carefully review this proposed rule before allowing MMS to impose this costly, burdensome and potentially market distorting system on Federal lessees.

[33] "Supporting Statement for Paperwork Reduction Act on Oil Location Differential Report." Page 6. Item 7.

5. ROYALTY-IN-KIND ALTERNATIVE

The costs and inefficiencies that would be imposed on lessees by the further supplementary proposed rule and Form MMS-4415 are entirely avoidable and unnecessary because a viable alternative to MMS' proposed valuation methodology exists: royalty-in-kind. Indeed, this alternative has been and continues to be studied by MMS. MMS itself, has studied the feasibility of a royalty-in-kind program for natural gas in the Gulf of Mexico and is starting pilot crude oil programs in Wyoming and Texas. Indeed, H.R. 3334 has now been introduced in the U.S. Congress by Representative Mac Thornberry and others which would mandate that the Federal government take its royalties in kind rather than in value.

A mandatory royalty-in-kind program would allow the government to obtain a fair market value for production from Federal lands without the administrative burden and inefficiencies or the economic distortions that would be imposed by the further supplementary proposed rule.

6. CONCLUSION

Our analysis of the revised Form MMS-4415 leads us to conclude that while MMS may have reduced the universe of potential respondents and the annual burden of complying with the information collection, the agency has done so at the expense of accuracy. MMS has reduced the potential number of responses so much that it will not be able to calculate statistically accurate differentials from the information it collects. It will have collected information which will have little, if any, practical utility for many aggregation points/market center pairs.

MMS has requested comments on whether it should eliminate Form MMS-4415 entirely and deal with those lessees who do not have access to the necessary data on an exception basis. MMS is assuming that relatively few lessees would not have access to necessary data. Ben Dillon, Vice President of the Independent Petroleum Association of America, indicated in his statement at the oil valuation hearing in Washington, DC on February 25, 1998 that many independents would be affected by the non-competitive crude oil call provision and would not have access actual differentials. Potentially, more than just a few lessees will need these published differentials, and so differentials could not be provided on an exception basis. Should MMS take such an approach, it will achieve the opposite of its stated intent of providing certainty.

Additionally, MMS has incorrectly estimated the burden of complying with the proposed rule because it has not considered the time required to calculate value under the further supplementary proposed rule nor the impact it would have on the time required to complete Form MMS-2014. MMS must estimate this burden in order to present an accurate estimate of the compliance burden associated with this proposed rule.

MMS has not carefully considered how it will use the data it wishes to collect. Until it is at least able to demonstrate how it will perform the necessary calculations, and how the data collected will support such calculations, OMB should not approve the proposed information collection.

The costs and inefficiencies that would be imposed on lessees by the further supplementary proposed rule and Form MMS-4415 are entirely avoidable and unnecessary because a viable, less burdensome alternative exists. A royalty-in-kind program would allow the government to obtain the fair market value for production on Federal lands without the unnecessary administrative complexity and burden that would be imposed by MMS' further supplementary proposed rule.

Attachment F

"How Will Royalty Be Calculated under *MMS Proposed Rule?*"

MMS Second Supplementary Notice of Proposed Rulemaking

HOW WILL ROYALTY VALUE BE CALCULATED UNDER MMS PROPOSED RULE?
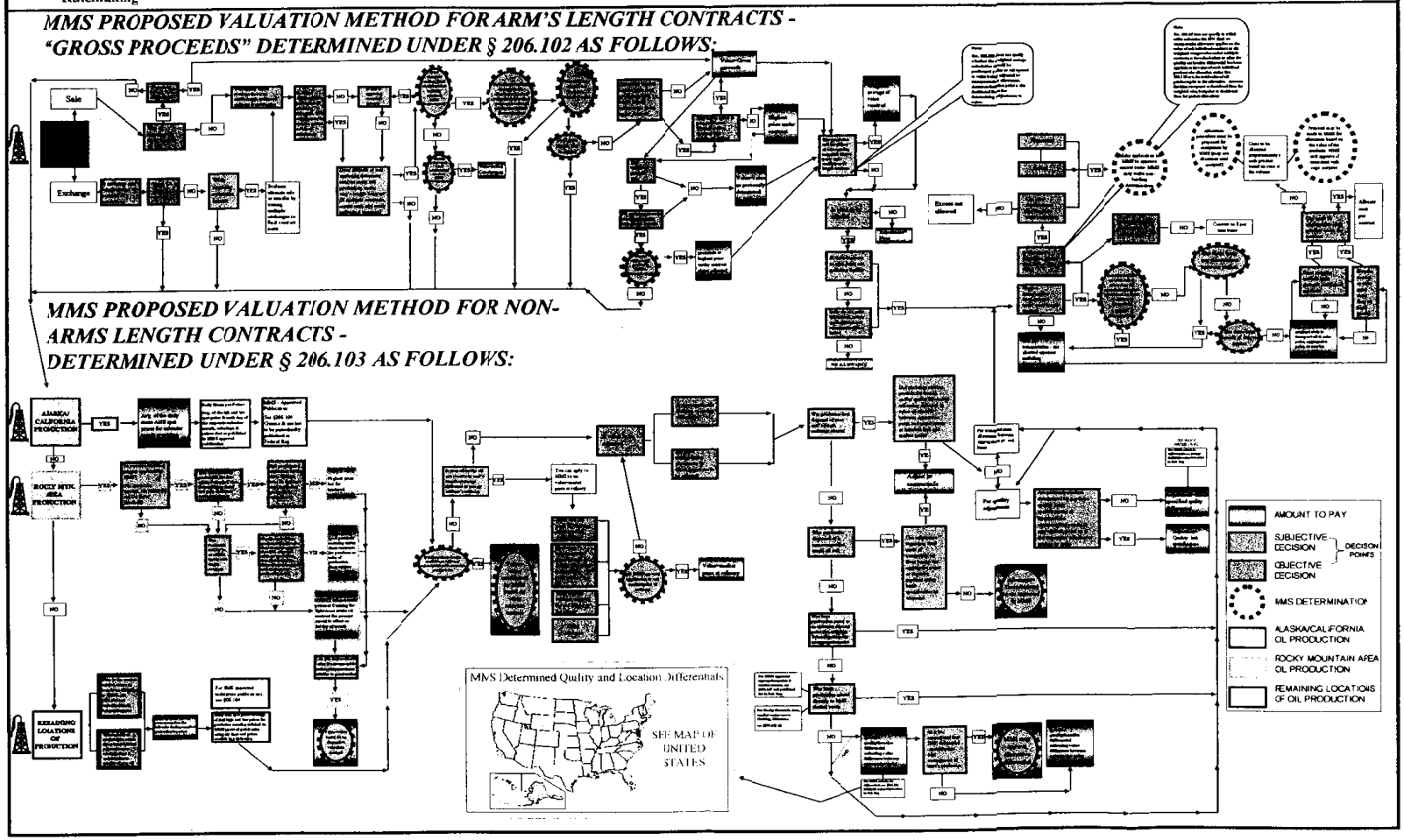
Establishing Oil Value for Royalty Due on Federal Leases.
63 FED. REG. 6113
FEBRUARY 6, 1998