OGOR Disposition/Adjustment Codes

Appendix I

Disposition/Adjustment Codes

- Disposition/adjustment codes (DC codes) are used to indicate how a product was removed from the lease/agreement
- Be sure to use the correct DC. If you are unsure, please contact your production specialist.
- Used on OGOR B and/or OGOR C
- DC are a 2 digit numeric code
- All DC can be found in Appendix I
- Appendix I can be found at https://www.onrr.gov/ReportPay/Handbooks/index.htm

Disposition/Adjustment Codes
DC 01 - Sales, Royalty Due, Measured

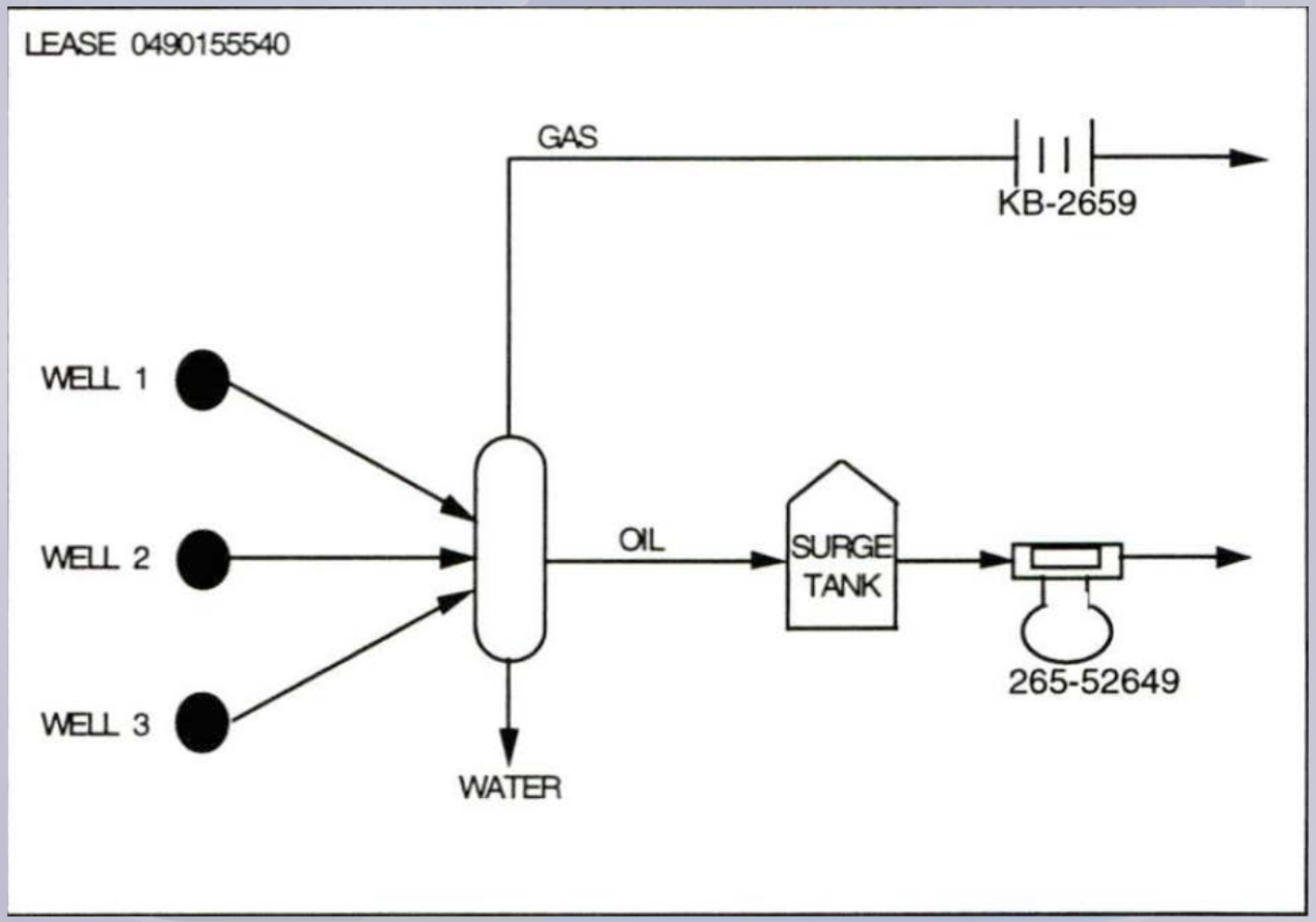

Disposition/Adjustment Codes
DC 01 - Sales, Royalty Due, Measured

Disposition Codes and Descriptions

Code	Disposition	Description	Products allowed	Volume column on OGOR-B	OGOR-B	Metering Point	Gas Plant	API (oil/ cond)	BTU (gas)	Adj on OGOR-C
01	Sales — Royalty Due — MEASURED	Use this code when a product is directly removed/sold from the lease/agreement and subject to royalty. It includes royalty-in-value, Indian royalty-in-kind (RIK), injected off-lease gas (unless royalty has been paid), flash gas, compensatory royalty, and net profit share (NPS) lease/agreement sales. It must be the volume determined at the approved point of royalty determination regardless of point of actual custody transfer. Do not use disposition code 01 for gas subject to a direct sale under a Percentage of Proceeds (POP) contract.	OIL	OIL/ COND	YES+	YES—OFF OPTIONAL—ON	NO	YES	NO	NO
			UNPROCESSED (WET) GAS, COALBED METHANE, FLASH GAS	GAS	YES+	YES—OFF OPTIONAL—ON	NO	NO	YES	NO

OGOR B

Product Disposition Information

Select Line		Line #	Action Code*	Disp. Code*	Metering Point	Gas Plant	API Gravity (99.9)	BTU (9999)	Oil/Cond. Disp Vol.(BBL)	Gas Disp Vol.(MCF)	Water Disp Vol. (BBL)
☐	>	1	Add	01	265 52649		28.8	0	896		0
☐	>	2	Add	01	KB2659		0.0	1150	0	15785	0

Disposition/Adjustment Codes
DC 04 – Sales, Royalty Due, Not Measured

Disposition Codes and Descriptions

Code	Disposition	Description	Products allowed	Volume column on OGOR-B	OGOR-B	Metering Point	Gas Plant	API (oil/ cond)	BTU (gas)	Adj on OGOR-C
04	Sales — Royalty Due — NOT MEASURED	Use this code to report: 1. Any sales of non-Royalty Relief oil and gas test production; 2. Production that is moved off the lease/agreement boundaries (approval required (BSEE or BLM) to aid in production activities for another lease/agreement and upon which royalty is required to be paid (e.g., lease/agreement gas used to operate another lease/agreement's production equipment); 3. Reclaimed oil (i.e., oil reclaimed during processing of produced water originating from the lease/agreement before injection); 4. OCS Section 6 lease/agreements to report any royalty-bearing fuel and/or flare volumes as stated in the lease/agreement terms. **Note: If the OCS Section 6 lease participates in an agreement, report only the portion of fuel or flare attributable to the Section 6 lease.**	OIL/COND	OIL/COND	YES+	NO	NO	YES	NO	YES<>
			UNPROCESSED (WET) GAS, COALBED METHANE	GAS	YES+	NO	NO	NO	YES	NO

Disposition/Adjustment Codes
DC 04 – Sales, Royalty Due, Not Measured

OGOR B

Product Disposition Information

Select Line		Line #	Action Code*	Disp. Code*	Metering Point	Gas Plant	API Gravity (99.9)	BTU (9999)	Oil/Cond. Disp Vol.(BBL)	Gas Disp Vol.(MCF)	Water Disp Vol. (BBL)
☐	>	1	Add	04			38.0	0	254	0	0
☐	>	2	Add	04			0.0	1268	0	1687	0

OGOR C

Product Sales From Facilities

Select Line		Line #	Action Code*	Prod. Code*	Inventory Storage Point	Metering Point	API Gravity (99.9)	Beginning Inventory (BBL)	Production (BBL)	Sales (BBL)	Adj. Code	Adj. Volume (BBL)	Ending Inventory (BBL)
☐	>	1	Add	01	01171110260	20171110260	35.0	1551	896	1023	04	-150	1274

Disposition/Adjustment Codes

DC 08 – Spilled and/or Lost, Avoidable, Royalty Due

Disposition Codes and Descriptions

Code	Disposition	Description	Products allowed	Volume column on OGOR-B	OGOR-B	Metering Point	Gas Plant	API (oil/ cond)	BTU (gas)	Adj on OGOR-C
08	Spilled and/or Lost — Avoidable — Royalty Due	Use this code to report oil and gas production native to lease/agreement that was spilled or lost and BLM or BSEE determined this loss was avoidable. Also use this code to report any liquid hydrocarbons that were burned without approval or deemed by BSEE to be avoidably lost or wasted. *(Addressed in 30 CFR 1250.1162)*	OIL/COND	OIL/COND	YES+	NO	NO	YES	NO	YES<>
			OIL/COND **	GAS	YES+	NO	NO	NO	YES	NO

*Unless you have documentation from BLM or BSEE stating the spilled and/or lost volume was unavoidable, you must report using DC 08 and pay royalties.

** this should be gas for products allowed

Disposition/Adjustment Codes

DC 08 – Spilled and/or Lost, Avoidable, Royalty Due

OGOR B

Product Disposition Information

Select Line		Line #	Action Code*	Disp. Code*	Metering Point	Gas Plant	API Gravity (99.9)	BTU (9999)	Oil/Cond. Disp Vol.(BBL)	Gas Disp Vol.(MCF)	Water Disp Vol. (BBL)
☐	>	1	Add	08			35.0	0	150	0	0
☐	>	2	Add	08			0.0	1125	0	50	0

OGOR C

Product Sales From Facilities

Select Line		Line #	Action Code*	Prod. Code*	Inventory Storage Point	Metering Point	API Gravity (99.9)	Beginning Inventory (BBL)	Production (BBL)	Sales (BBL)	Adj. Code	Adj. Volume (BBL)	Ending Inventory (BBL)
☐	>	1	Add	01	01171110260	20171110260	35.0	1551	896	1023	08	-150	1274

Disposition/Adjustment Codes

DC 10 – Produced into Inventory prior to Sales

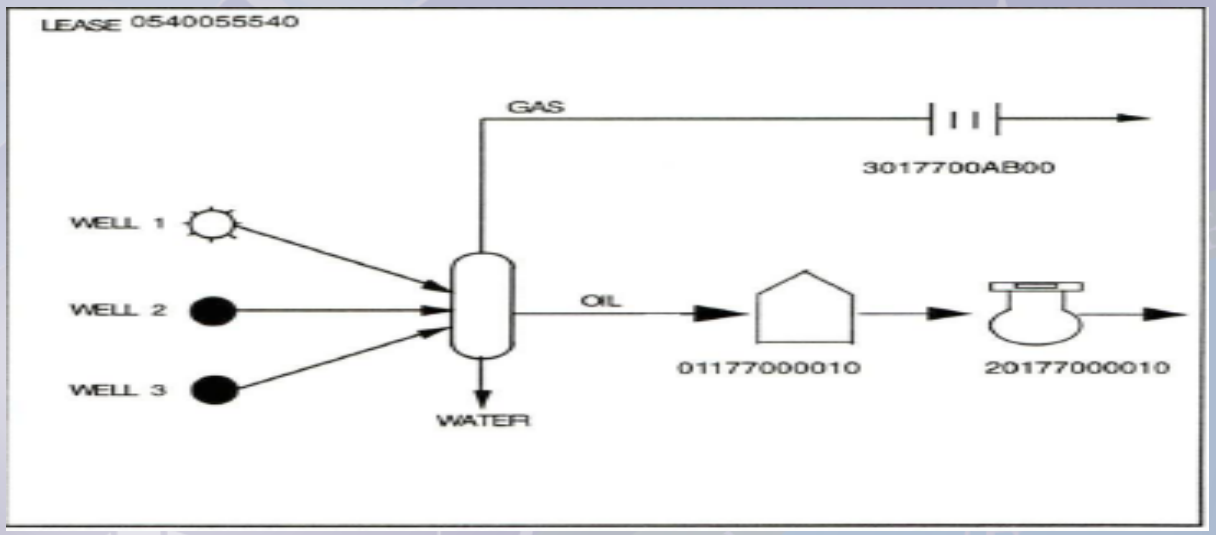

Disposition Codes and Descriptions

Code	Disposition	Description	Products allowed	Volume column on OGOR-B	OGOR-B	Metering Point	Gas Plant	API (oil/ cond)	BTU (gas)	Adj on OGOR-C
10	Produced into Inventory Prior to Sales	Use this code when a liquid hydrocarbon or CO_2 product is produced into a facility that maintains inventories used in calculating production prior to sales.	CARBON DIOXIDE	OIL/COND	YES+	NO	NO	NO	NO	NO
			OIL/COND	NA	YES+	NO	NO	NO	NO	NO

Disposition/Adjustment Codes

DC 10 – Produced into Inventory prior to Sales

OGOR B

Product Disposition Information

Select Line		Line #	Action Code*	Disp. Code*	Metering Point	Gas Plant	API Gravity (99.9)	BTU (9999)	Oil/Cond. Disp Vol.(BBL)	Gas Disp Vol.(MCF)	Water Disp Vol. (BBL)
☐	>	1	Add	10			0.0	0	168	0	0

OGOR C

Product Sales From Facilities

Select Line		Line #	Action Code*	Prod. Code*	Inventory Storage Point	Metering Point	API Gravity (99.9)	Beginning Inventory (BBL)	Production (BBL)	Sales (BBL)	Adj. Code	Adj. Volume (BBL)	Ending Inventory (BBL)
☐	>	1	Add	01	01177000010	20177000010	35.0	300	168	189			279

* DC 10 on OGOR B MUST match the volume in the Production column

Disposition/Adjustment Codes
DC 11 – Transferred to Facility (gas)

- DC 11 needs to have a Gas Plant number reported on the line
- Gas Plant numbers can be found at https://www.onrr.gov/ReportPay/PDFDocs/Gas_Plant_Listing.pdf
- If you can not find your gas plant, please contact Stacey Showalter at 303-231-3211 or stacey.showalter@onrr.gov

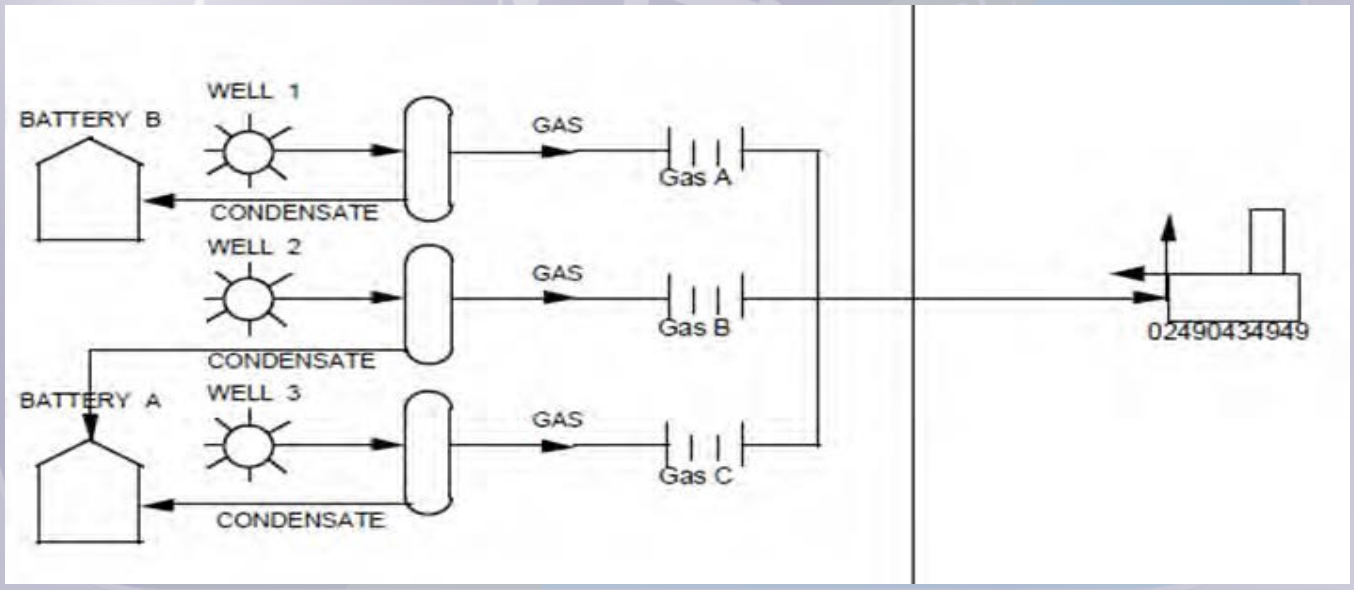

Disposition/Adjustment Codes
DC 11 – Transferred to Facility (gas)

Disposition Codes and Descriptions

Code	Disposition	Description	Products allowed	Volume column on OGOR-B	OGOR-B	Metering Point	Gas Plant	API (oil/ cond)	BTU (gas)	Adj on OGOR-C
11	Transferred to Facility	Use this code when production is transferred to a separation facility or plant facility for processing. This includes gas subject to a direct sale under a Percentage of Proceeds (POP) contract. *You should also use this code when gas production is transferred to a separation facility where liquids are extracted from the gas stream and the operator receives an allocation for drip/retrograde condensate.*	OIL/COND	OIL/COND	NO	NO	NO	NO	NO	YES<>
			UNPROCESSED (WET) GAS, COALBED METHANE	GAS	YES+	YES—OFF OPTIONAL—ON	YES	NO	YES	NO

OGOR B

Product Disposition Information

Select Line		Line #	Action Code*	Disp. Code*	Metering Point	Gas Plant	API Gravity (99.9)	BTU (9999)	Oil/Cond. Disp Vol.(BBL)	Gas Disp Vol.(MCF)	Water Disp Vol. (BBL)
☐	>	1	Add	11	3068333VS01	02490434949	0.0	1250	0	10000	0

Disposition/Adjustment Codes

DC 11 (Transfer to Facility) & DC 13 (Transferred from Facility) (oil/condensate)

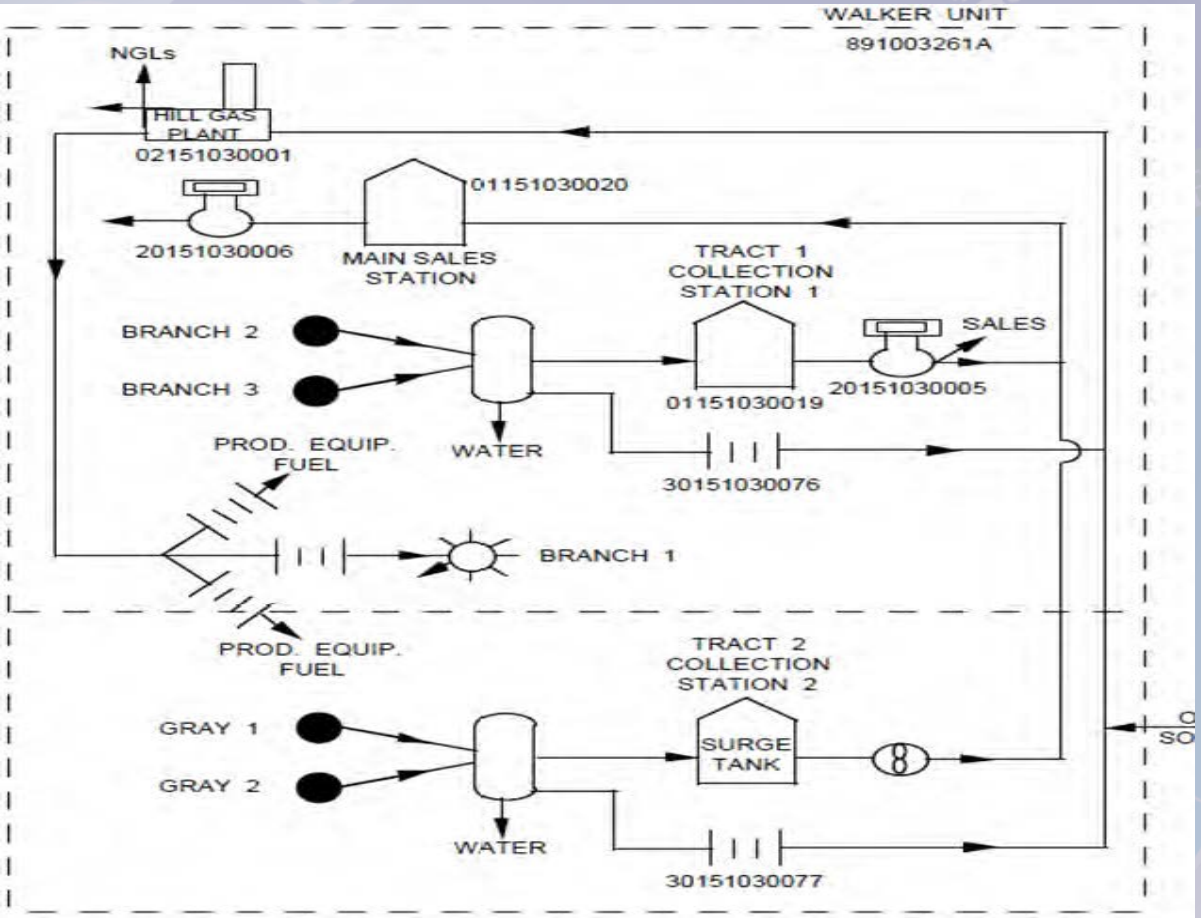

Disposition/Adjustment Codes

DC 11 (Transfer to Facility) & DC 13 (Transferred from Facility) (oil/condensate)

Disposition Codes and Descriptions

Code	Disposition	Description	Products allowed	Volume column on OGOR-B	OGOR-B	Metering Point	Gas Plant	API (oil/ cond)	BTU (gas)	Adj on OGOR-C
11	Transferred to Facility	Use this code when production is transferred to a separation facility or plant facility for processing. This includes gas subject to a direct sale under a Percentage of Proceeds (POP) contract. *You should also use this code when gas production is transferred to a separation facility where liquids are extracted from the gas stream and the operator receives an allocation for drip/retrograde condensate.*	OIL/COND	OIL/COND	NO	NO	NO	NO	NO	YES<>
			UNPROCESSED (WET) GAS, COALBED METHANE	GAS	YES+	YES—OFF OPTIONAL—ON	YES	NO	YES	NO
13	Transferred from Facility	Use this code when products are received from a facility and returned to the lease/agreement for disposal (e.g., injection, retrograde, fuel use). Volume must be negative on OGOR-B. If residue, you must report with Disposition Code 12. If pipeline condensate, you must report with Disposition Code 16. Volumes should not include additional purchased volumes.	OIL/COND, RETROGRADE, PIPELINE DRIP, OR SCRUBBER CONDENSATE	OIL/COND	YES<>	NO	NO	NO	NO	YES+
			PROCESSED (RESIDUE) GAS	GAS	YES<>	NO	NO	NO	NO	NO

OGOR C

Product Sales From Facilities

Select Line		Line #	Action Code*	Prod. Code*	Inventory Storage Point	Metering Point	API Gravity (99.9)	Beginning Inventory (BBL)	Production (BBL)	Sales (BBL)	Adj. Code	Adj. Volume (BBL)	Ending Inventory (BBL)
☐	>	1	Add	01	01151030019	20151030005	30.9	300	168	189	11	-279	0
☐	>	2	Add	01	01151030020	20151030016	30.9	0	60	0	13	279	339

Disposition/Adjustment Codes

DC 12 (Transfer to Facility) – Returned to L/A & DC 13 (Transferred from Facility)

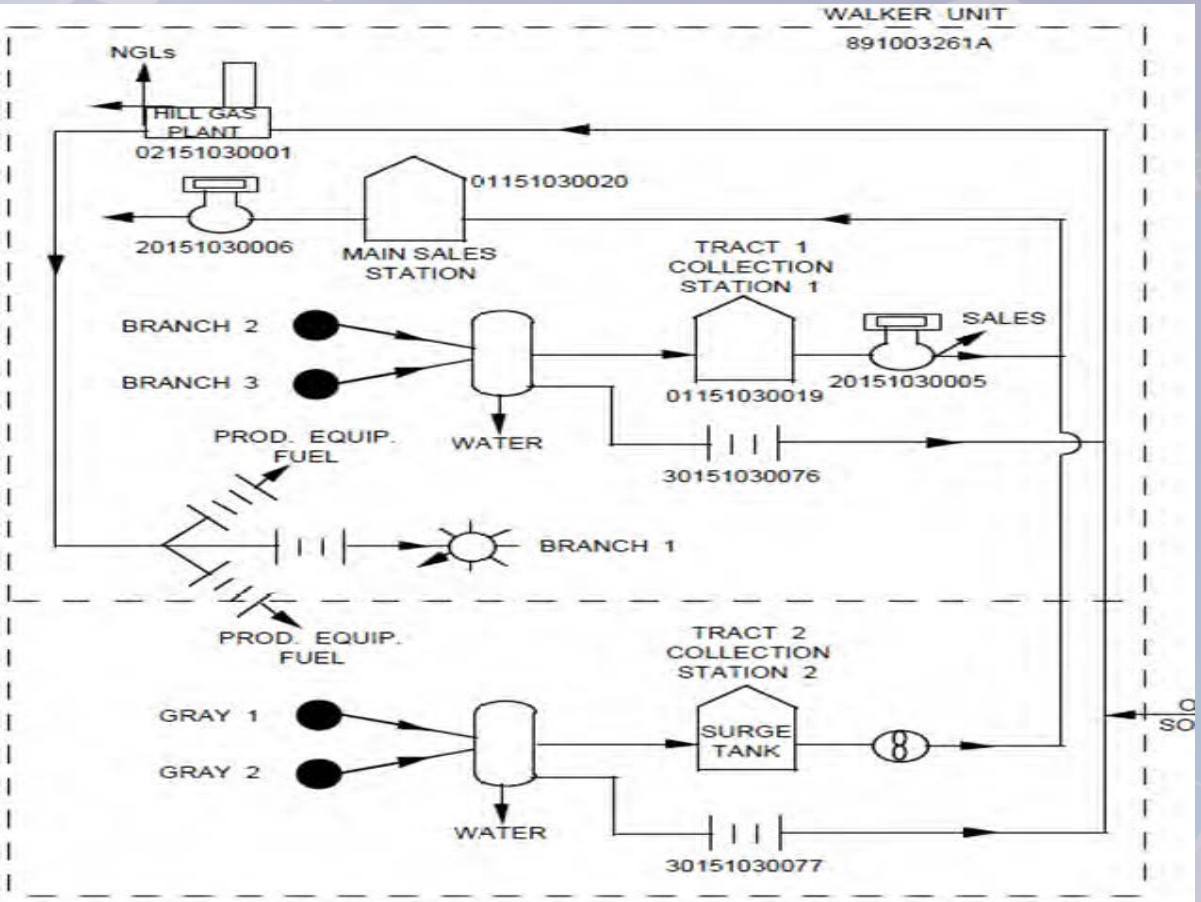

Disposition/Adjustment Codes

DC 12 (Transfer to Facility) – Returned to L/A & DC 13 (Transferred from Facility)

- DC 12 is used when gas is transferred to a gas plant and residue is returned using DC 13 for the residue that is returned
- DC 13 MUST be a smaller volume than DC 12
- If you have a situation where DC 13 is the same or larger than 12, contact your production analyst for further guidance

Disposition/Adjustment Codes

DC 12 (Transfer to Facility – Returned to L/A) & DC 13 (Transferred from Facility)

Disposition Codes and Descriptions

Code	Disposition	Description	Products allowed	Volume column on OGOR-B	OGOR-B	Metering Point	Gas Plant	API (oil/ cond)	BTU (gas)	Adj on OGOR-C
12	Transferred to Facility — Returned to L/A	Use this code to report gas transferred to a gas plant when the residue is returned to the originating lease/agreement and no royalties have been paid. Must be used in conjunction with Disposition Code 13.		GAS	YES+	YES—OFF OPTIONAL—ON	YES	NO	YES	NO
13	Transferred from Facility	Use this code when products are received from a facility and returned to the lease/agreement for disposal (e.g., injection, retrograde, fuel use). Volume must be negative on OGOR-B. If residue, you must report with Disposition Code 12. If pipeline condensate, you must report with Disposition Code 16. Volumes should not include additional purchased volumes.	OIL/COND, RETROGRADE, PIPELINE DRIP, OR SCRUBBER CONDENSATE	OIL/COND	YES<>	NO	NO	NO	NO	YES+
			PROCESSED (RESIDUE) GAS	GAS	YES<>	NO	NO	NO	NO	NO

OGOR B

Product Disposition Information

Select Line		Line #	Action Code*	Disp. Code*	Metering Point	Gas Plant	API Gravity (99.9)	BTU (9999)	Oil/Cond. Disp Vol.(BBL)	Gas Disp Vol.(MCF)	Water Disp Vol. (BBL)
☐	>	1	Add	12	3068333VS01	02151030001	0.0	1250	0	10000	0
☐	>	2	Add	13			0.0	0	0	-312	0

Disposition/Adjustment Codes

DC 13 (Transferred from Facility) & DC 16 (Pipeline Drip/Retrograde Production)

Disposition Codes and Descriptions

Code	Disposition	Description	Products allowed	Volume column on OGOR-B	OGOR-B	Metering Point	Gas Plant	API (oil/ cond)	BTU (gas)	Adj on OGOR-C
13	Transferred from Facility	Use this code when products are received from a facility and returned to the lease/agreement for disposal (e.g., injection, retrograde, fuel use). Volume must be negative on OGOR-B. If residue, you must report with Disposition Code 12. If pipeline condensate, you must report with Disposition Code 16. Volumes should not include additional purchased volumes.	OIL/COND, RETROGRADE, PIPELINE DRIP, OR SCRUBBER CONDENSATE	OIL/COND	YES<>	NO	NO	NO	NO	YES+
			PROCESSED (RESIDUE) GAS	GAS	YES<>	NO	NO	NO	NO	NO
			PROCESSED (RESIDUE) GAS (NOT NATIVE)	GAS	YES+	YES—OFF OPTIONAL—ON		NO	YES	NO
16	Pipeline Drip/ Retrograde Scrubber Production	Use this code to report liquid hydrocarbon volumes recovered from wet gas deliveries at a facility located upstream of a gas plant; provided that the lessee (1) has retained processing rights and (2) for offshore, has agreed to participate in the approved pipeline condensate allocation. Always report this code with a corresponding Disposition Code 13.	RETROGRADE OR PIPELINE DRIP CONDENSATE (Not gas plant scrubber.)	OIL/COND	YES+	YES—OFF OPTIONAL—ON	NO	YES	NO	YES<>

OGOR B

Product Disposition Information

Select Line		Line #	Action Code*	Disp. Code*	Metering Point	Gas Plant	API Gravity (99.9)	BTU (9999)	Oil/Cond. Disp Vol.(BBL)	Gas Disp Vol.(MCF)	Water Disp Vol. (BBL)
☐	>	1	Add	13			0.0	0	-159	0	0
☐	>	2	Add	16	20685555500		66.8	0	159	0	0

Disposition/Adjustment Codes

DC 13 (Transferred from Facility) & DC 16 (Pipeline Drip/Retrograde Production)

Offshore

- **Retrograde**: The portion of a natural gas stream that liquefies downstream of the approved FMP, naturally separated from the gas stream as it moves to shore, due to changes in temperature and pressure, and extracted at an onshore separation facility. It is also known as pipeline condensate or drip. This is NOT injected condensate which is composed of hydrocarbons leaving the platform in a liquid phase. Retrograde leaves the platform in a gaseous state and it is not produced from a well as an oil product.

- To determine whether or not royalty is due on retrograde, please refer to the Dear Reporter letter dated June 2, 2000
  http://www.onrr.gov/DearRep.htm

Disposition/Adjustment Codes

DC 13 (Transferred from Facility) & DC 16 (Pipeline Drip/Retrograde Production)

Onshore

- **Drip Condensate**: This is where the gas leaves the lease/agreement in the pipeline as wet gas and during the transmission of the gas, liquid hydrocarbons fall out at a compressor or drip station along the pipeline but prior to the inlet of the gas plant. This is drip condensate, pipeline condensate or retrograde condensate (drip condensate).

- If you have an Indian lease/agreement and you are receiving a statement for drip condensate, then you need to report that volume on the OGOR B using DCs 13 & 16.

- If you have a Federal lease/agreement and you are receiving a statement for drip condensate, and the production month is after January 1, 2017, then you need to report that volume on the OGOR B using DCs 13 & 16. This is also true for periods prior to January 1, 2017, if you value your gas under the processed gas regulations and are allocated drip condensate.

Disposition/Adjustment Codes

DC 15 (Sales – Buy Back Measured – Royalty not due), DC 25 (Buy Back Purchased for L/A use) & DC 26 (Buy Back – Used on lease)

- Buy-Back Letters can be found at https://www.onrr.gov/DearRep.htm
- Dear Reporter letter dated December 15,2010
- Examples 5-17A & 5-17B in the Minerals Production Reporter Handbook

Disposition/Adjustment Codes

DC 15 (Sales – Buy Back Measured – Royalty not due), DC 25 (Buy Back Purchased for L/A use) & DC 26 (Buy Back – Used on lease)

Buy Back less than Sales

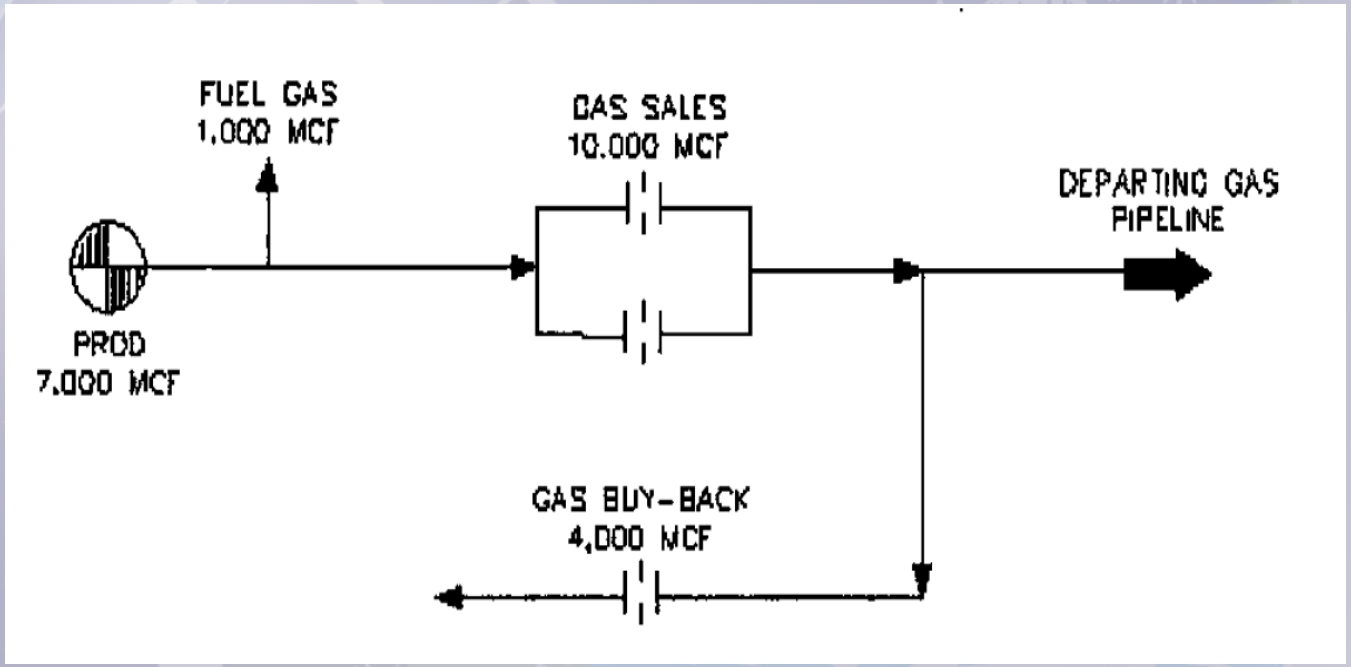

Disposition/Adjustment Codes

DC 15 (Sales – Buy Back Measured – Royalty not due), DC 25 (Buy Back Purchased for L/A use) & DC 26 (Buy Back – Used on lease)

Buy Back greater than Sales

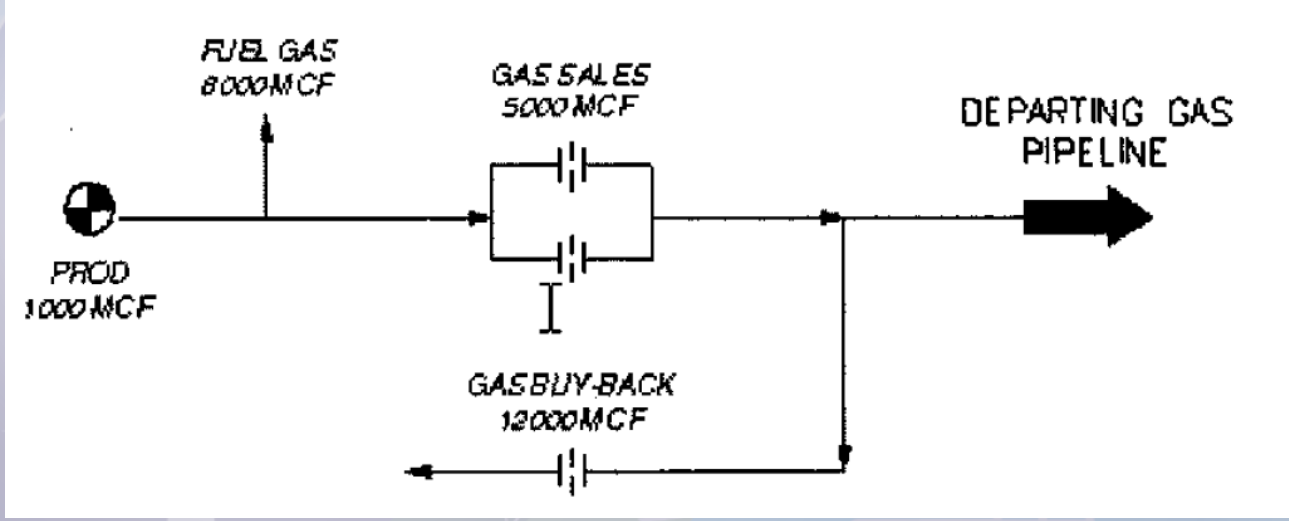

Disposition/Adjustment Codes

DC 15 (Sales – Buy Back Measured – Royalty not due), DC 25 (Buy Back Purchased for L/A use) & DC 26 (Buy Back – Used on lease)

Disposition Codes and Descriptions

Code	Disposition	Description	Products allowed	Volume column on OGOR-B	OGOR-B	Metering Point	Gas Plant	API (oil/ cond)	BTU (gas)	Adj on OGOR-C
15	Sales – Buy-Back – Measured – Royalty Not Due	Use this code to report the Buy-Back volume (Not Native production) which was intended for use on lease/agreement, but not actually used, then left the lease/agreement through the Sales Meter. The combined total of Disposition Codes 15 and 26 must equal Disposition Code 25. **Volume must be positive.**	OIL/COND (NOT NATIVE)	OIL/COND	YES+	YES—OFF OPTIONAL—ON	NO	YES	NO	NO
			PROCESSED (RESIDUE) GAS (NOT NATIVE)	GAS	YES+	YES—OFF OPTIONAL—ON		NO	YES	NO
25	Buy-Back Purchased for L/A Use	Use this code to report the entire Buy-Back oil/gas* volume purchased off lease/agreement for lease/agreement use. If you purchase more Buy-Back than you use on the lease/agreement, use Disposition Code 15 for gas sent back through the Sales Meter. Combined total of Disposition Codes 15 & 26 must equal Disposition Code 25. **Volume must be negative.** * Oil and Gas must be reported on separate lines.	OIL/COND	OIL/COND	Yes<>	NO	NO	NO	NO	NO
			UNPROCESSED (WET) GAS	GAS	Yes<>	NO	NO	NO	NO	NO
26	Buy-Back — Used on L/A	Use this code to report the portion of Buy-Back oil/gas volume actually used on or for the benefit of the lease/agreement. Must use in conjunction with Disposition Code 25. **Volume must be positive.**	OIL/COND	OIL/COND	Yes+	NO	NO	NO	NO	NO
			UNPROCESSED (WET) GAS	GAS	Yes+	NO	NO	NO	NO	NO

Disposition/Adjustment Codes

DC 15 (Sales – Buy Back Measured – Royalty not due), DC 25 (Buy Back Purchased for L/A use) & DC 26 (Buy Back – Used on lease)

OGOR B

Product Disposition Information

Select Line		Line #	Action Code*	Disp. Code*	Metering Point	Gas Plant	API Gravity (99.9)	BTU (9999)	Oil/Cond. Disp Vol.(BBL)	Gas Disp Vol.(MCF)	Water Disp Vol. (BBL)
☐	>	1	Add	25			0.0	0	0	-15785	0
☐	>	2	Add	15		3060777SR01	0.0	1078	0	15785	0

OGOR B

Product Disposition Information

Select Line		Line #	Action Code*	Disp. Code*	Metering Point	Gas Plant	API Gravity (99.9)	BTU (9999)	Oil/Cond. Disp Vol.(BBL)	Gas Disp Vol.(MCF)	Water Disp Vol. (BBL)
☐	>	1	Add	25			0.0	0	0	-15785	0
☐	>	2	Add	15		3060777SR01	0.0	1078	0	15000	0
☐	>	3	Add	26			0.0	0	0	785	0

OGOR B

Product Disposition Information

Select Line		Line #	Action Code*	Disp. Code*	Metering Point	Gas Plant	API Gravity (99.9)	BTU (9999)	Oil/Cond. Disp Vol.(BBL)	Gas Disp Vol.(MCF)	Water Disp Vol. (BBL)
☐	>	1	Add	25			0.0	0	0	-15785	0
☐	>	2	Add	26			0.0	0	0	15785	0

Disposition/Adjustment Codes

DC 17 (Water Injected/Transferred Off Lease)

Disposition Codes and Descriptions

Table A-1. Disposition/Adjustment Codes and Descriptions

Code	Disposition	Description	Products allowed	Volume column on OGOR-B	OGOR-B	Metering Point	Gas Plant	API (oil/ cond)	BTU (gas)	Adj on OGOR-C
17	Water Injected/ Transferred Off –L/A	Use this code only for produced water that is transferred or injected off-lease before disposal.	WATER-FORMATION	WATER	YES+	NO	NO	NO	NO	NO

OGOR B

Product Disposition Information

Select Line		Line #	Action Code*	Disp. Code*	Metering Point	Gas Plant	API Gravity (99.9)	BTU (9999)	Oil/Cond. Disp Vol.(BBL)	Gas Disp Vol.(MCF)	Water Disp Vol. (BBL)
☐	>	1	Add	17			0.0	0	0	0	135

Disposition/Adjustment Codes

DC 27 (Water Disposal – Other than Injected)

Disposition Codes and Descriptions

Code	Disposition	Description	Products allowed	Volume column on OGOR-B	OGOR-B	Metering Point	Gas Plant	API (oil/ cond)	BTU (gas)	Adj on OGOR-C
27	Water Disposal —Other than Injected / Transferred	Use this code to report both onshore and offshore produced water disposed of other than by injection on- or off-lease/agreement or transferred off-lease/agreement (e.g., treated/disposed of overboard, trucked off, lined or unlined surface pit). See Disposition Code 17 for transferred for off-lease injection.	WATER-FORMATION	WATER	YES+	NO	NO	NO	NO	NO

OGOR B

Product Disposition Information

Select Line		Line #	Action Code*	Disp. Code*	Metering Point	Gas Plant	API Gravity (99.9)	BTU (9999)	Oil/Cond. Disp Vol.(BBL)	Gas Disp Vol.(MCF)	Water Disp Vol. (BBL)
☐	>	1	Add	27			0.0	0	0	0	164

Disposition/Adjustment Codes

DC 20 (Used on L/A – Native Production Only)

Disposition Codes and Descriptions

Code	Disposition	Description	Products allowed	Volume column on OGOR-B	OGOR-B	Metering Point	Gas Plant	API (oil/ cond)	BTU (gas)	Adj on OGOR-C
20	Used on L/A – Native Production Only	Use this code to report production from a lease/agreement that has been used on or for the benefit of the lease/agreement with prior approval from BLM or BSEE (e.g., gas native to lease/agreement used to operate production facilities). This code should not be used to report gas which has been purchased to conduct lease/agreement operations.	FUEL OIL	OIL/COND	YES+	NO	NO	NO	NO	YES<>
			FUEL GAS	GAS	YES+	NO	NO	NO	NO	NO

OGOR B

Product Disposition Information

Select Line		Line #	Action Code*	Disp. Code*	Metering Point	Gas Plant	API Gravity (99.9)	BTU (9999)	Oil/Cond. Disp Vol.(BBL)	Gas Disp Vol.(MCF)	Water Disp Vol. (BBL)
☐	>	1	Add	20			0.0	0	0	210	0

Disposition/Adjustment Codes

DC 21 (Flared Oil-Well Gas) & DC 22 (Flared Gas-Well Gas)

Disposition Codes and Descriptions

Code	Disposition	Description	Products allowed	Volume column on OGOR-B	OGOR-B	Metering Point	Gas Plant	API (oil/ cond)	BTU (gas)	Adj on OGOR-C
21	Flared Oil-Well Gas	Use this code to report flared casing head gas from an oil well.	UNPROCESSED (WET) GAS	GAS	YES+	OFF — FMP starting with "50" or blank *Over 2000 BOPD BSEE must assign a Flare/Vent FMP	NO	NO	NO	NO
22	Flared Gas-Well Gas	Use this code to report flared gas from a gas well.	UNPROCESSED (WET) GAS	GAS	YES+	OFF — FMP starting with "50" or blank *Over 2000 BOPD BSEE must assign a Flare/Vent FMP	NO	NO	NO	NO

OGOR B

Select Line		Line #	Action Code*	Disp. Code*	Metering Point	Gas Plant	API Gravity (99.9)	BTU (9999)	Oil/Cond. Disp Vol.(BBL)	Gas Disp Vol.(MCF)	Water Disp Vol. (BBL)
☐	>	1	Add	21			0.0	0	0	80	0
☐	>	2	Add	22			0.0	0	0	75	0

Disposition/Adjustment Codes

DC 61 (Vented Oil-Well Gas) & DC 62 (Vented Gas-Well Gas)

Disposition Codes and Descriptions

Code	Disposition	Description	Products allowed	Volume column on OGOR-B	OGOR-B	Metering Point	Gas Plant	API (oil/ cond)	BTU (gas)	Adj on OGOR-C
61	Vented Oil-Well Gas	Use this code to report vented casing head gas from an oil well.	UNPROCESSED (WET) GAS	GAS	YES+	OFF – FMP starting with "50" or blank *Over 2000 BOPD BSEE must assign a Flare/Vent FMP	NO	NO	NO	NO
62	Vented Gas-Well Gas	Use this code to report vented gas from a gas well.	UNPROCESSED (WET) GAS	GAS	YES+	FMP starting with "50" or blank *Over 2000 BOPD BSEE must assign a Flare/Vent FMP	NO	NO	NO	NO

OGOR B

Product Disposition Information

Select Line		Line #	Action Code*	Disp. Code*	Metering Point	Gas Plant	API Gravity (99.9)	BTU (9999)	Oil/Cond. Disp Vol.(BBL)	Gas Disp Vol.(MCF)	Water Disp Vol. (BBL)
☐	>	1	Add	61			0.0	0	0	80	0
☐	>	2	Add	62			0.0	0	0	100	0

Disposition/Adjustment Codes

DC 33 (Flared Gas – Royalty Due) & DC 63 (Vented Gas – Royalty Due)

- Dear Reporter Letter dated April 9, 2018

- The letter talks about OGOR reporting for royalty-bearing flared and vented gas volumes.

Disposition/Adjustment Codes

DC 33 (Flared Gas – Royalty Due) & DC 63 (Vented Gas – Royalty Due)

Disposition Codes and Descriptions

Code	Disposition	Description	Products Allowed	OGOR B	Metering Point	Gas Plant	API	BTU	Adj. code on C
33	Flared Gas	Use this code to report flared gas , royalty due.	GAS	YES		NO	NO	NO	NO
63	Vented Gas	Use this code to report vented gas, roylty due	GAS	YES		NO	NO	NO	NO

OGOR B

Product Disposition Information

Select Line		Line #	Action Code*	Disp. Code*	Metering Point	Gas Plant	API Gravity (99.9)	BTU (9999)	Oil/Cond. Disp Vol.(BBL)	Gas Disp Vol.(MCF)	Water Disp Vol. (BBL)
☐	>	1	Add	33			0.0	1025	0	80	0
☐	>	2	Add	63			0.0	1035	0	100	0

Disposition/Adjustment Codes

DC 45 (Adjustment of Inventories for Original Operator) & DC 47 (Adjustment of Inventories for Receiving Operator)

Disposition Codes and Descriptions

Code	Disposition	Description	Products allowed	Volume column on OGOR-B	OGOR-B	Metering Point	Gas Plant	API (oil/ cond)	BTU (gas)	Adj on OGOR-C
45	Adjustment of Inventories for Original Operator (Operator Change)	Use this code to adjust inventories for the originating operator when all or part of an existing inventory for oil/condensate is transferred to another operator because of a change in operator only. The volume must be negative. Report the name or ONRR operator number of the operator receiving the inventory in the Comments field. If all inventories are transferred, the Ending Inventory should equal zero.	OIL/COND	OIL/COND	NO	NO	NO	NO	NO	YES<>
47	Adjustment of Inventories for Receiving Operator (Operator Change)	Use this code to adjust inventories for the receiving operator when all or part of an existing inventory for oil/condensate has been received from another operator because of a change in operator. The volume reported must be positive. Report the name or ONRR operator number of the originating operator transferring the inventory in the Comments field. Beginning Inventory should equal zero unless there is previously reported inventory to be reported.	OIL/COND	OIL/COND	NO	NO	NO	NO	NO	YES+

Disposition/Adjustment Codes

DC 45 (Adjustment of Inventories for Original Operator) & DC 47 (Adjustment of Inventories for Receiving Operator)

OGOR C Original Operator

Product Sales From Facilities

Select Line		Line #	Action Code*	Prod. Code*	Inventory Storage Point	Metering Point	API Gravity (99.9)	Beginning Inventory (BBL)	Production (BBL)	Sales (BBL)	Adj. Code	Adj. Volume (BBL)	Ending Inventory (BBL)
☐	>	1	Add	01	01151030019	20151030005	30.9	300	168	189	45	-279	0

OGOR C Receiving Operator

Product Sales From Facilities

Select Line		Line #	Action Code*	Prod. Code*	Inventory Storage Point	Metering Point	API Gravity (99.9)	Beginning Inventory (BBL)	Production (BBL)	Sales (BBL)	Adj. Code	Adj. Volume (BBL)	Ending Inventory (BBL)
☐	>	1	Add	01	01151030019	20151030005	30.9		210	101	47	279	388

Disposition/Adjustment Codes

DC 42 (Differences/Adjustment)

Disposition Codes and Descriptions

Code	Disposition	Description	Products allowed	Volume column on OGOR-B	OGOR-B	Metering Point	Gas Plant	API (oil/ cond)	BTU (gas)	Adj on OGOR-C
42	Differences/ Adjustments	Use this code to account for differences and/or adjustments for the following reasons: 1. Product is gained or lost from a gathering system (e.g., pipeline pigging for a gain or pipeline fill for a loss); 2. Rounding differences (small volumes only); 3. Well production is reported as meter readings and the meter readings differ from actual production; 4. Well production is reported as an estimate that is based on well tests; and/or 5. Additional gas volumes allocated back to the lease (i.e., flash gas allocated). **Volume can be positive or negative.**	OIL/COND	OIL/COND	YES±	NO	NO	NO	NO	YES±
			UNPROCESSED (WET) GAS, COALBED METHANE, NITROGEN, HELIUM, FLASH GAS,	GAS	YES±	NO	NO	NO	NO	NO
			CARBON DIOXIDE							YES

Whenever you use DC 42, provide a reason in the comment field.

Disposition/Adjustment Codes

DC 42 (Differences/Adjustment)

OGOR B

Product Disposition Information

Select Line		Line #	Action Code*	Disp. Code*	Metering Point	Gas Plant	API Gravity (99.9)	BTU (9999)	Oil/Cond. Disp Vol.(BBL)	Gas Disp Vol.(MCF)	Water Disp Vol. (BBL)
☐	>	1	Add	42			0.0		0	10	0

OGOR B

Product Disposition Information

Select Line		Line #	Action Code*	Disp. Code*	Metering Point	Gas Plant	API Gravity (99.9)	BTU (9999)	Oil/Cond. Disp Vol.(BBL)	Gas Disp Vol.(MCF)	Water Disp Vol. (BBL)
☐	>	1	Add	42			0.0	0	6	0	0

OGOR C

Product Sales From Facilities

Select Line		Line #	Action Code*	Prod. Code*	Inventory Storage Point	Metering Point	API Gravity (99.9)	Beginning Inventory (BBL)	Production (BBL)	Sales (BBL)	Adj. Code	Adj. Volume (BBL)	Ending Inventory (BBL)
☐	>	1	Add	01	01151030019	20151030005	30.9	300	168	189	42	8	0